8. 3 级维修

8-1.框图

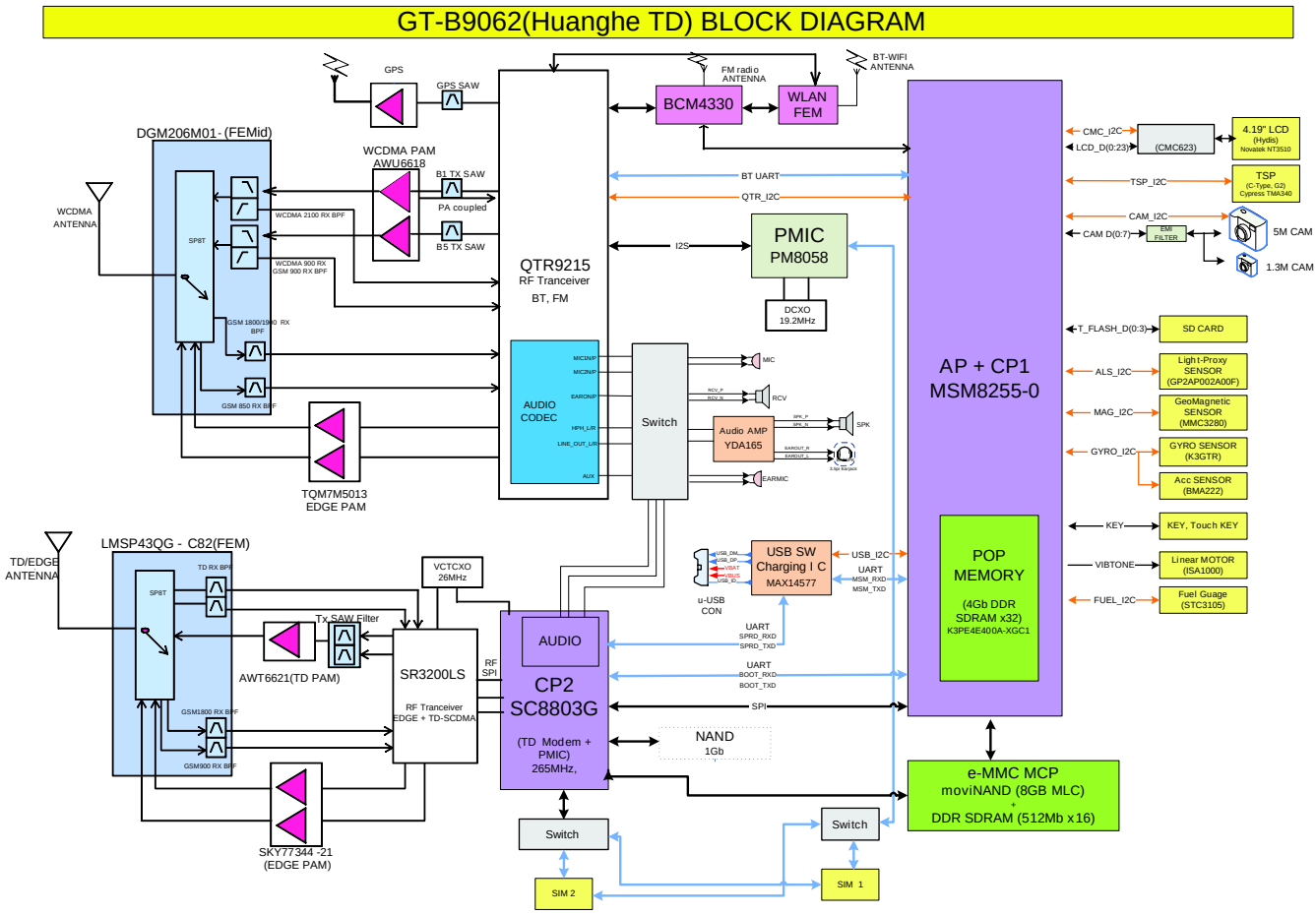

保密和所有权-本维修手册内容的变更恕不另行通知。
未经三星书面授权而发布，传送，或违背本文件中的任何内容或数据是严格禁止的。

8-2.主板图

8-2-1.顶部

保密和所有权-本维修手册内容的变更恕不另行通知。
未经三星书面授权而发布，传送，或违背本文件中的任何内容或数据是严格禁止的。

8-2-2.底部

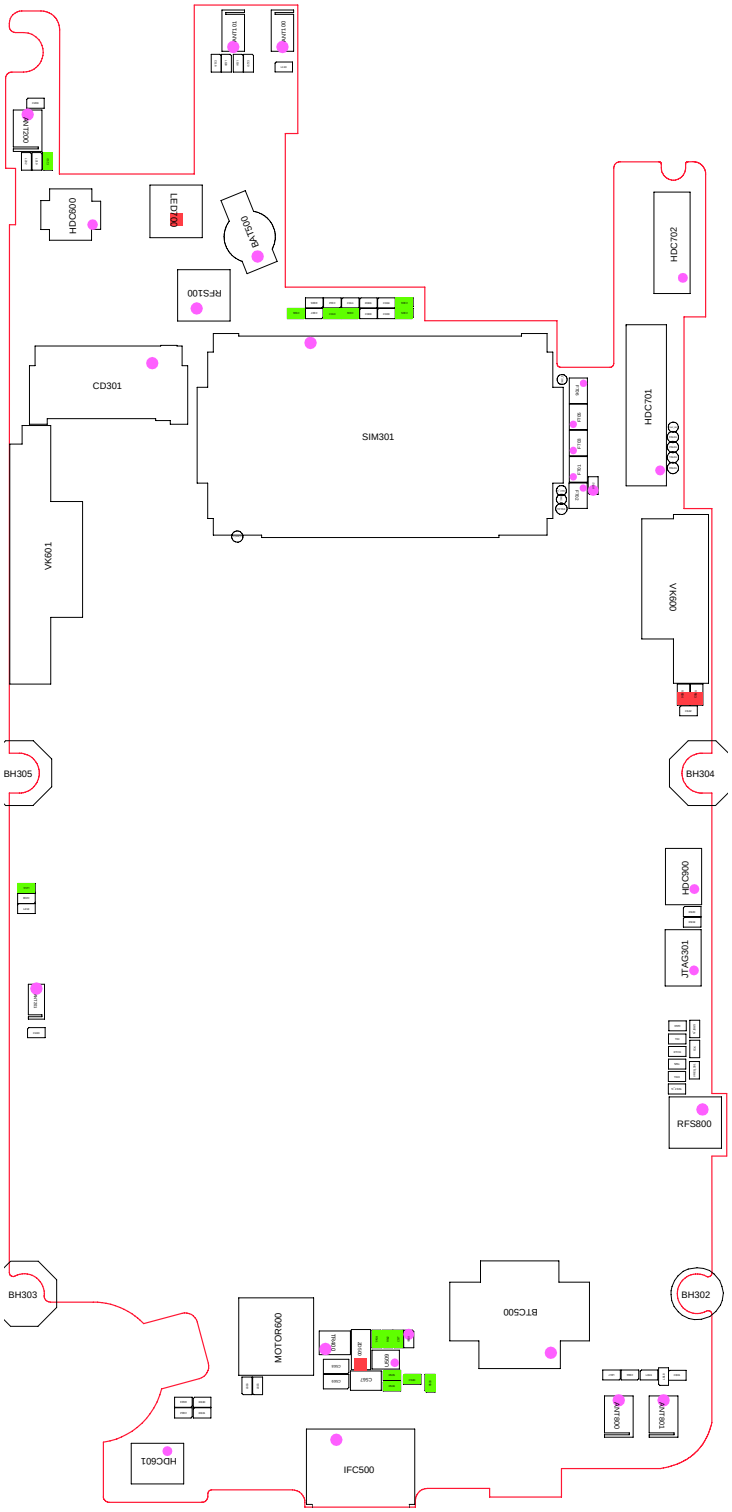

保密和所有权-本维修手册内容的变更恕不另行通知。
未经三星书面授权而发布，传送，或违背本文件中的任何内容或数据是严格禁止的。

8-3-1开机

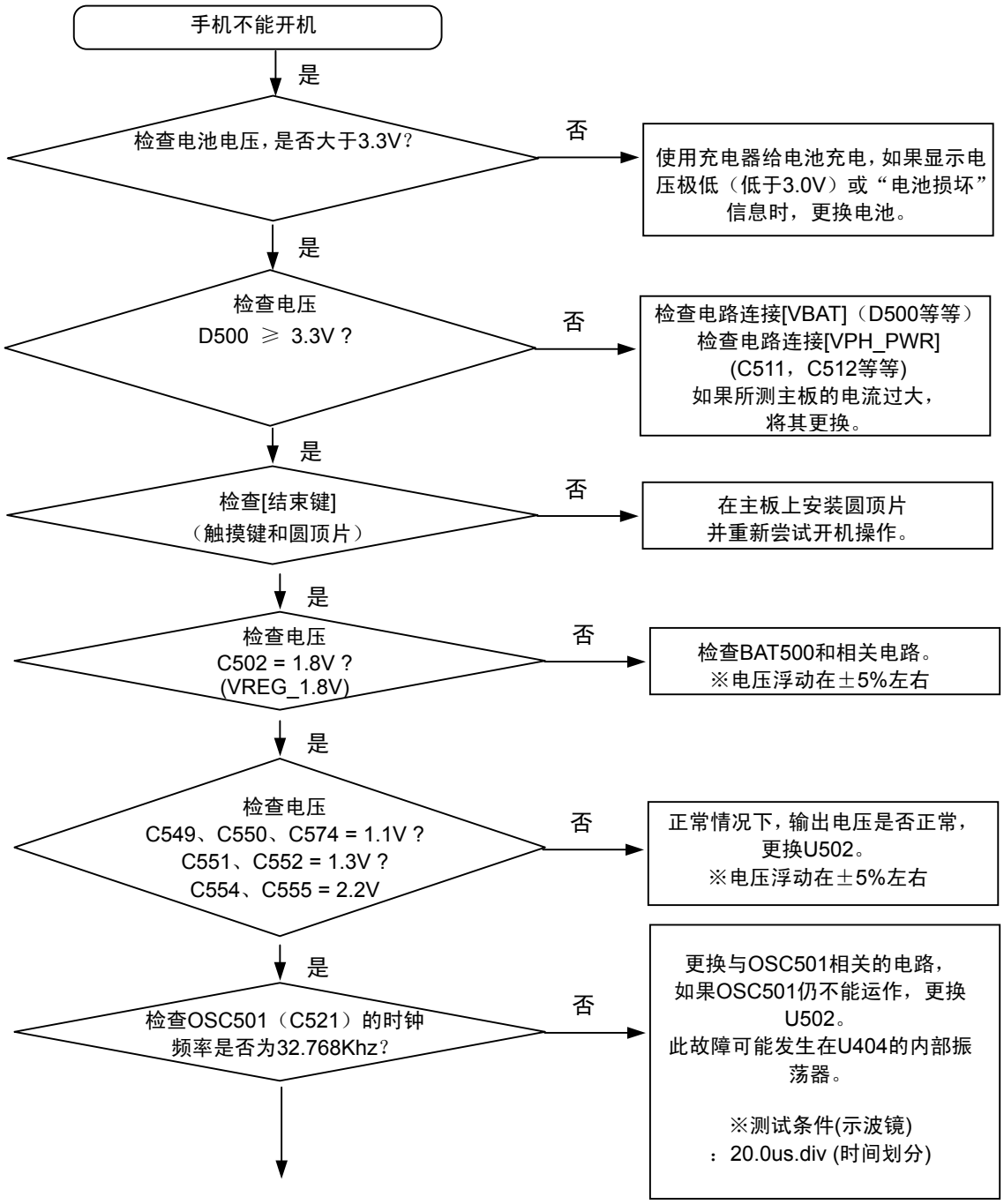

保密和所有权-本维修手册内容的变更恕不另行通知。
未经三星书面授权而发布，传送，或违背本文件中的任何内容或数据是严格禁止的。

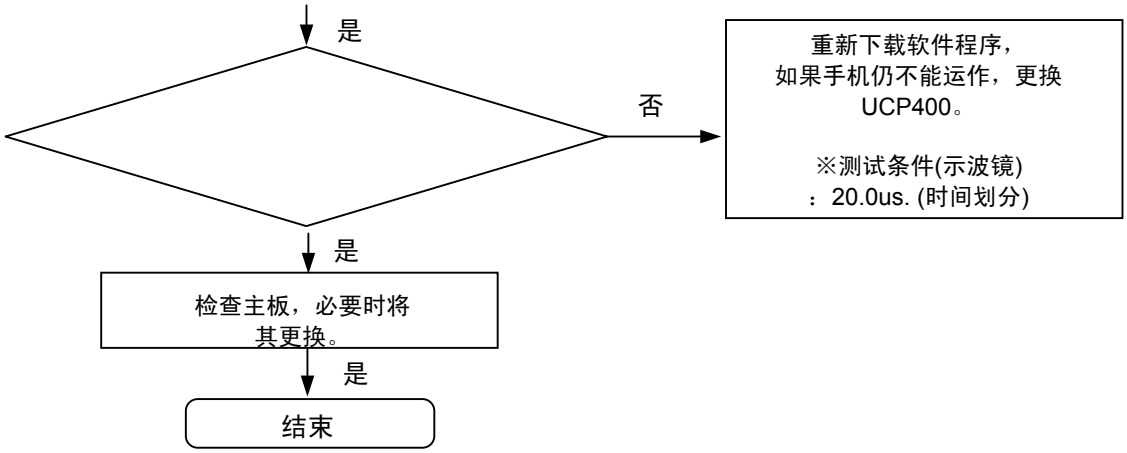

保密和所有权-本维修手册内容的变更恕不另行通知。
未经三星书面授权而发布，传送，或违背本文件中的任何内容或数据是严格禁止的。

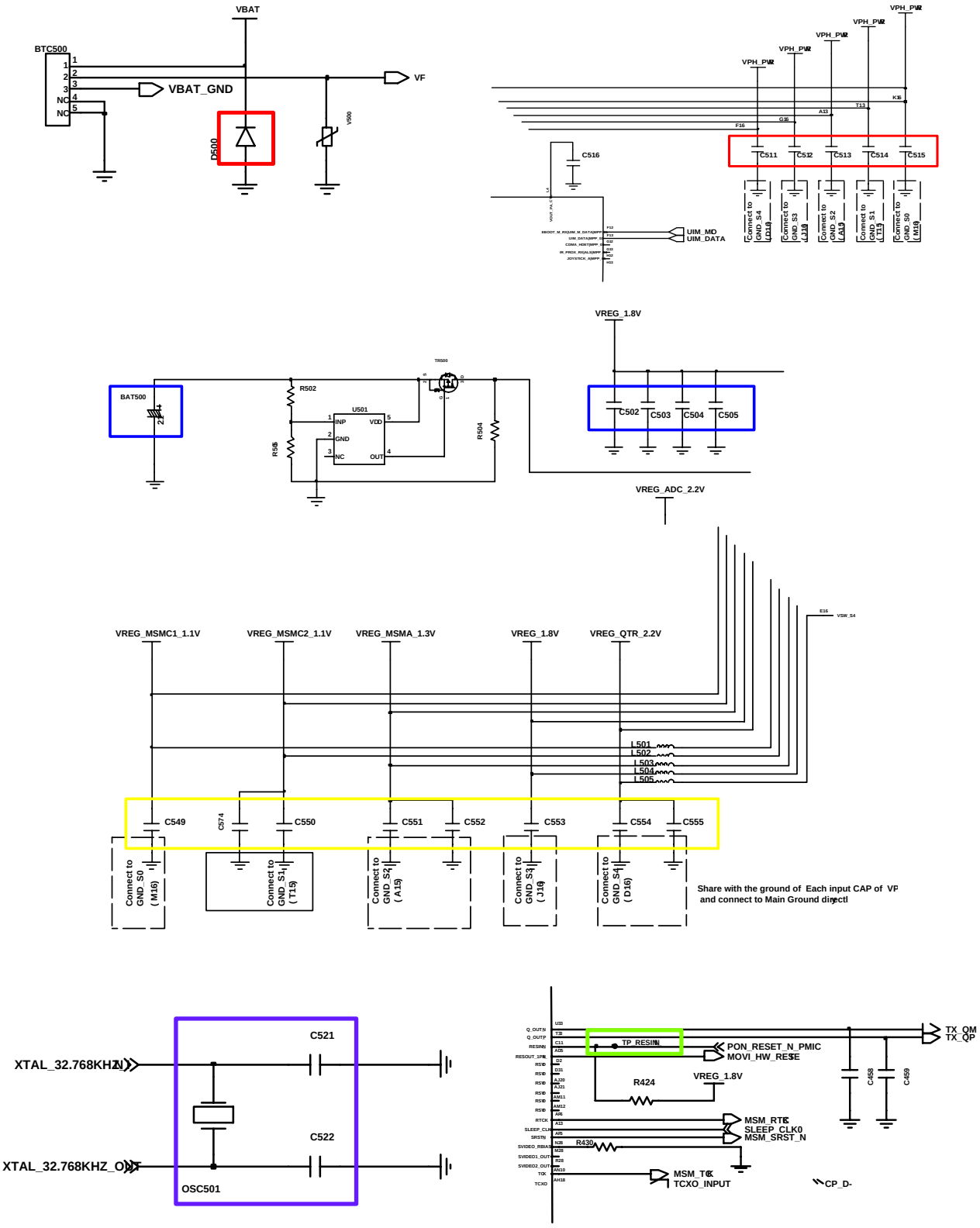

Confidential and proprietary-the contents in this service guide subject to change without prior notice.
Distribution, transmission, or infringement of any content or data from this document without Samsung's written authorization is strictly prohibited.

Confidential and proprietary-the contents in this service guide subject to change without prior notice.
Distribution, transmission, or infringement of any content or data from this document without Samsung's written authorization is strictly prohibited.

8-3-2.充电部分

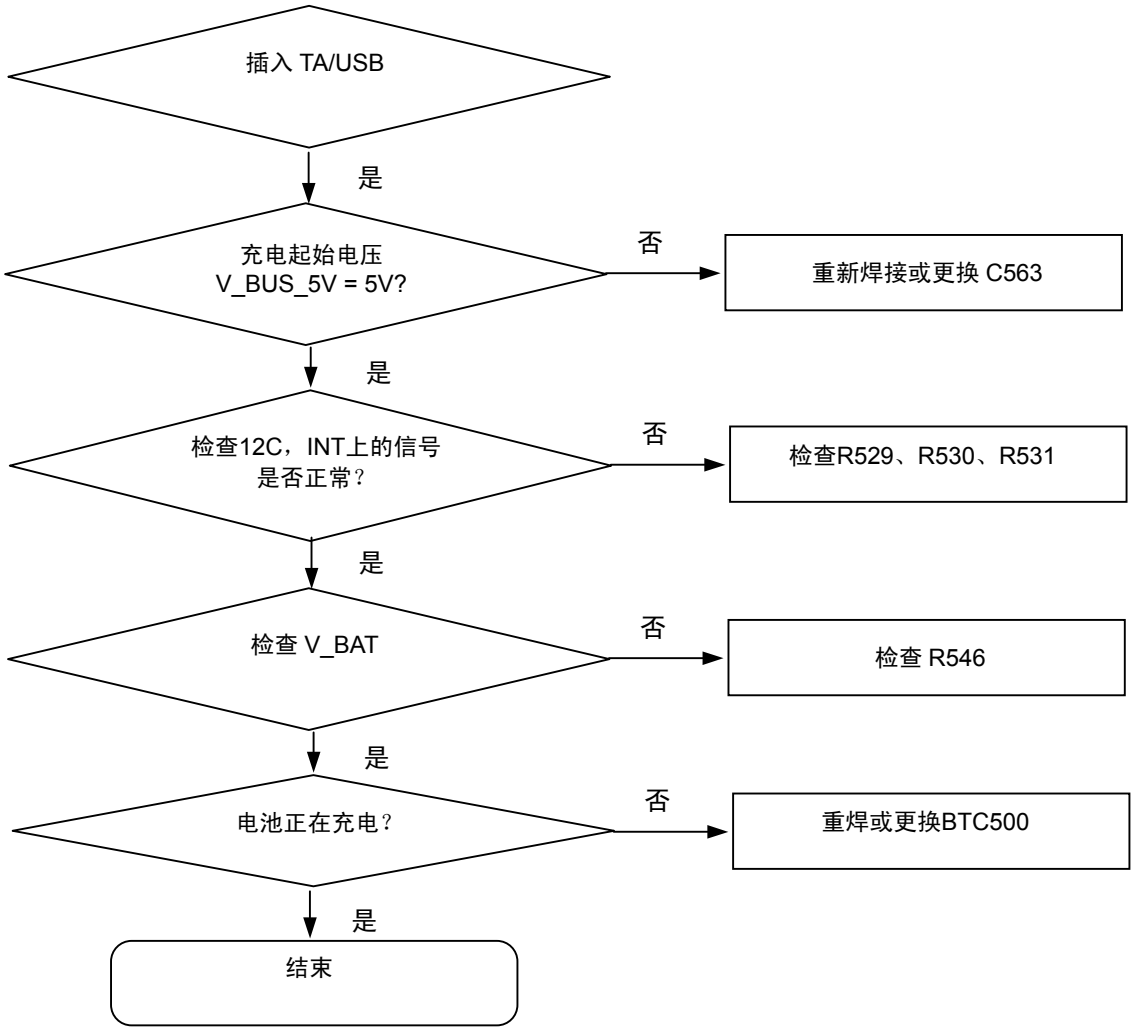

保密和所有权-本维修手册内容的变更恕不另行通知。
未经三星书面授权而发布，传送，或违背本文件中的任何内容或数据是严格禁止的。

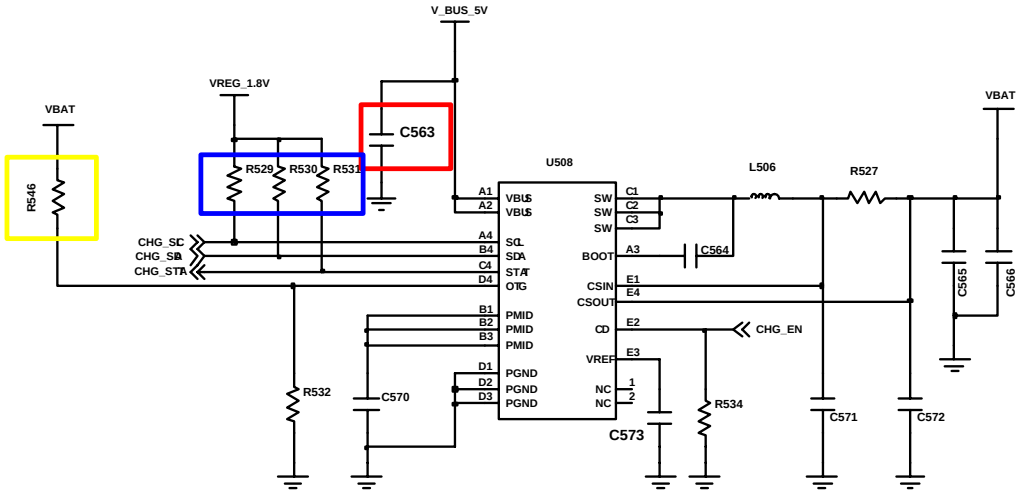

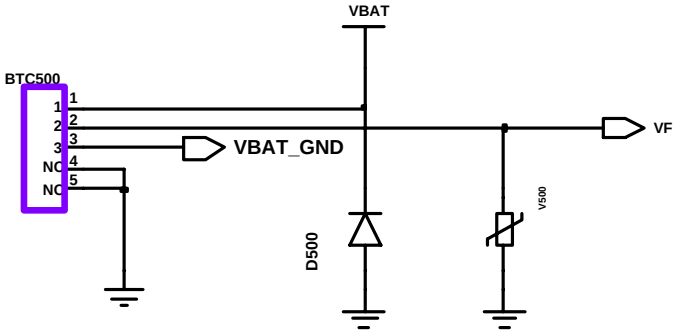

Confidential and proprietary-the contents in this service guide subject to change without prior notice.
Distribution, transmission, or infringement of any content or data from this document without Samsung's written authorization is strictly prohibited.

8-3-3.液晶显示屏

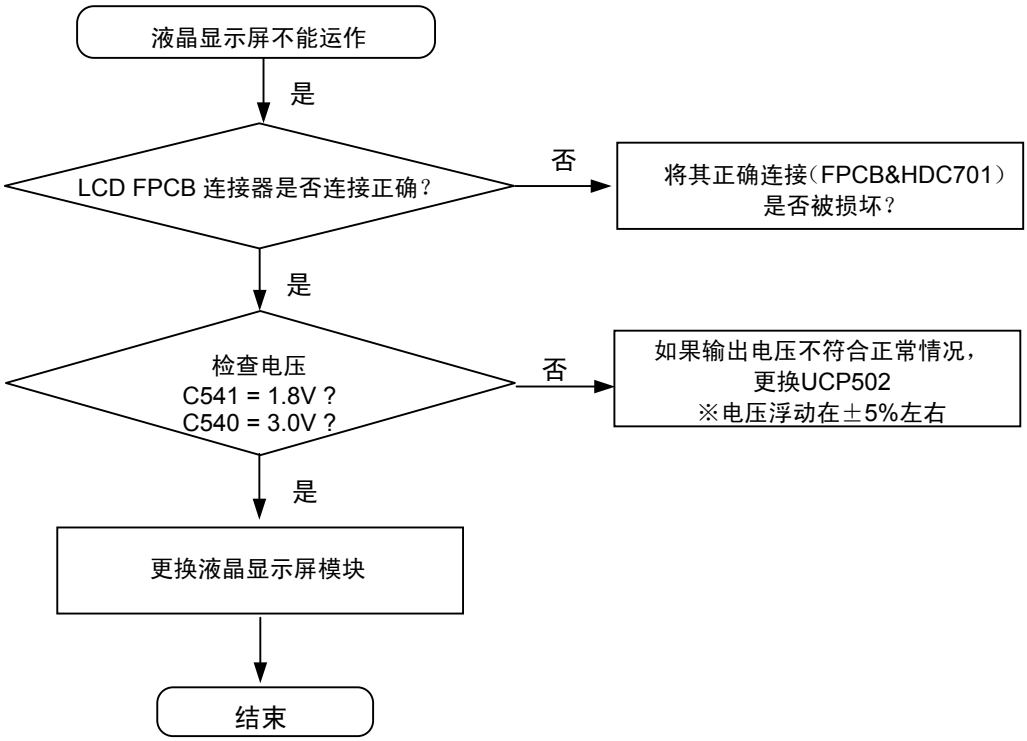

保密和所有权-本维修手册内容的变更恕不另行通知。
未经三星书面授权而发布，传送，或违背本文件中的任何内容或数据是严格禁止的。

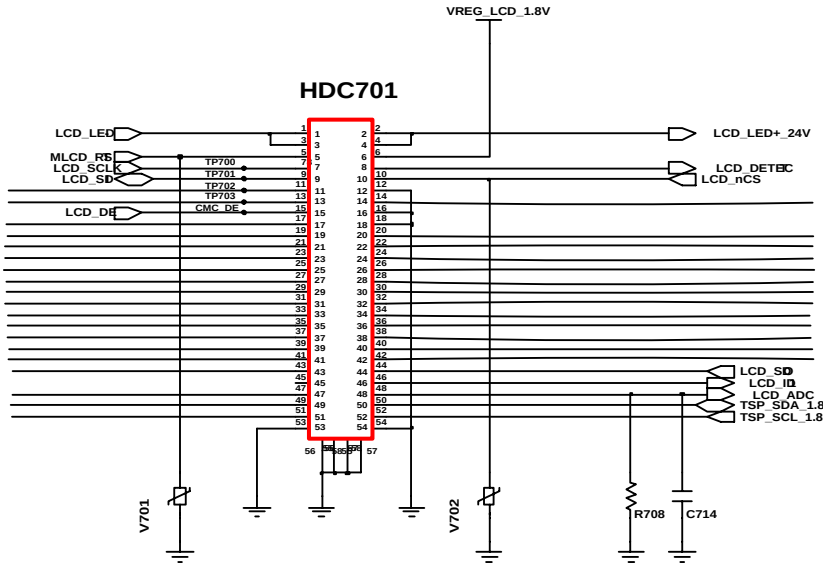

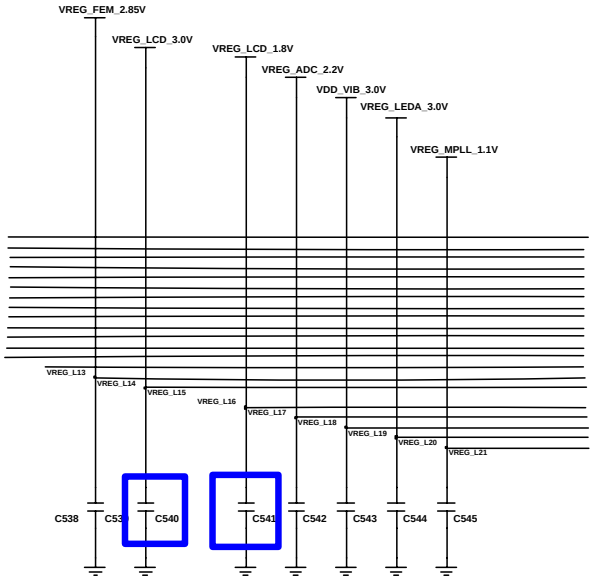

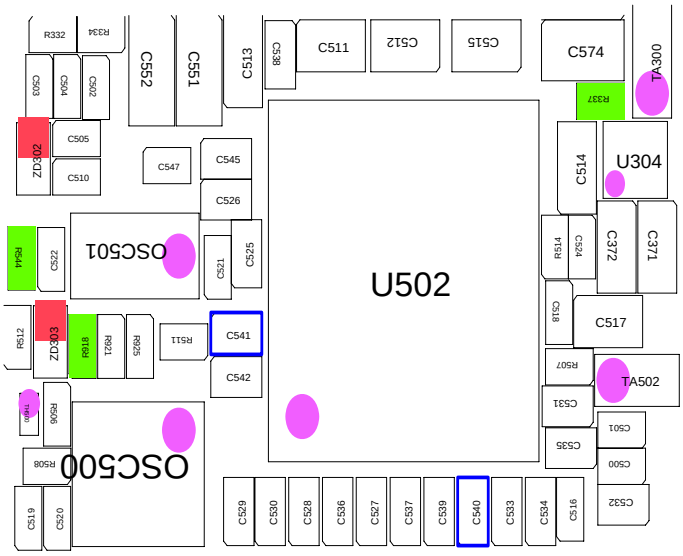

Confidential and proprietary-the contents in this service guide subject to change without prior notice.
Distribution, transmission, or infringement of any content or data from this document without Samsung's written authorization is strictly prohibited.

8-3-4.扬声器/接收器

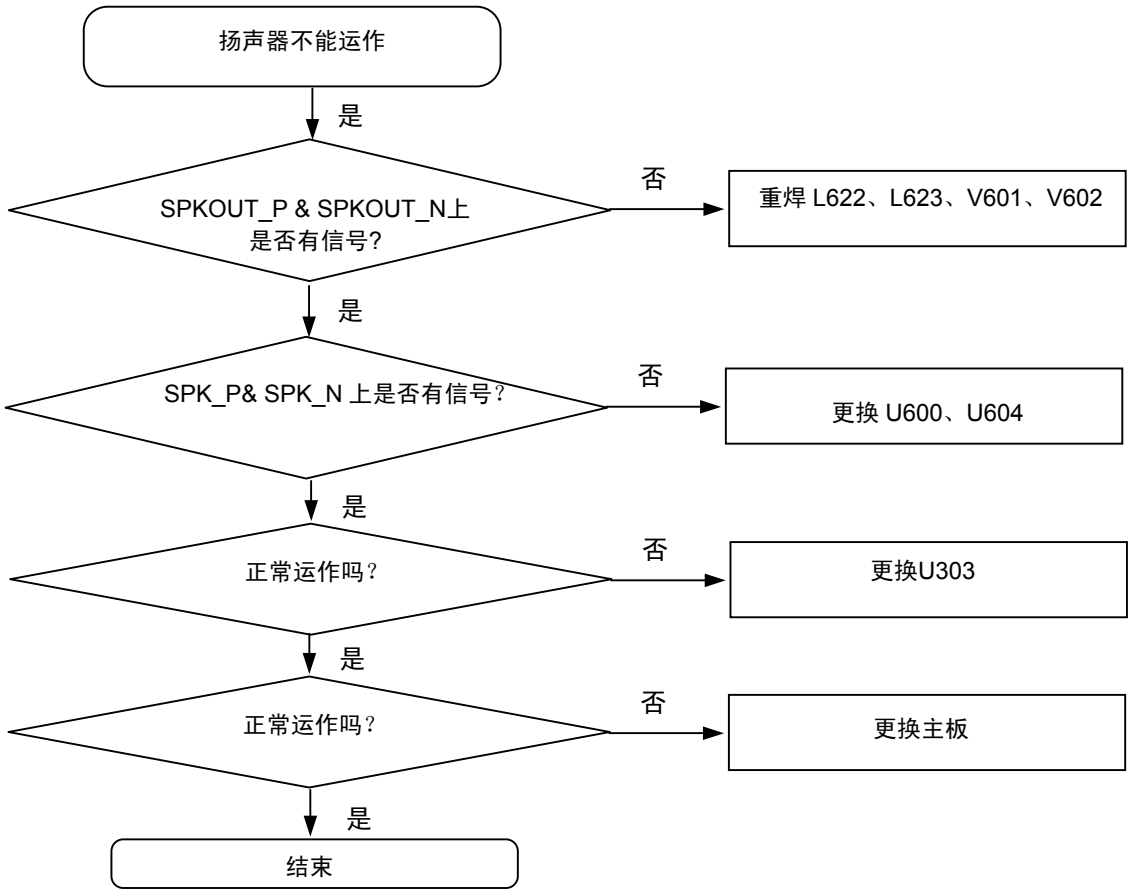

保密和所有权-本维修手册内容的变更恕不另行通知。
未经三星书面授权而发布，传送，或违背本文件中的任何内容或数据是严格禁止的。

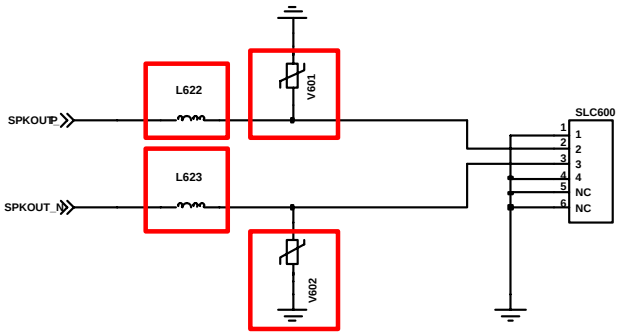

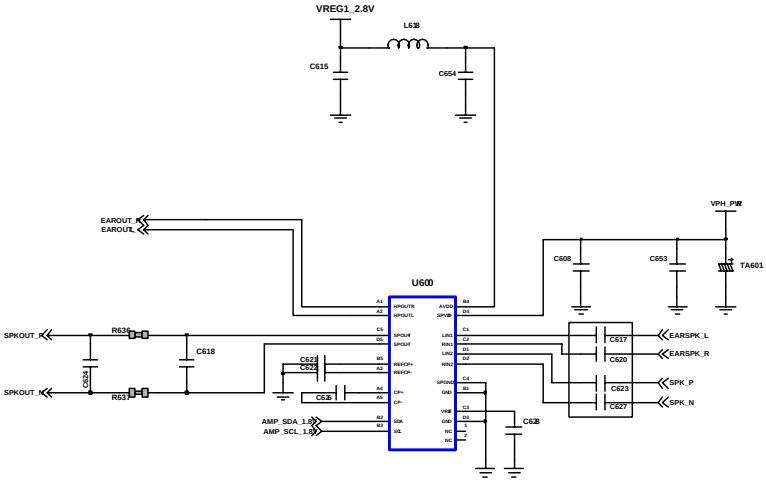

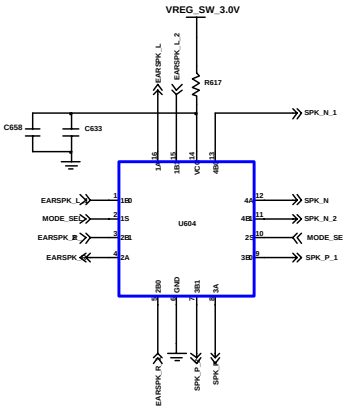

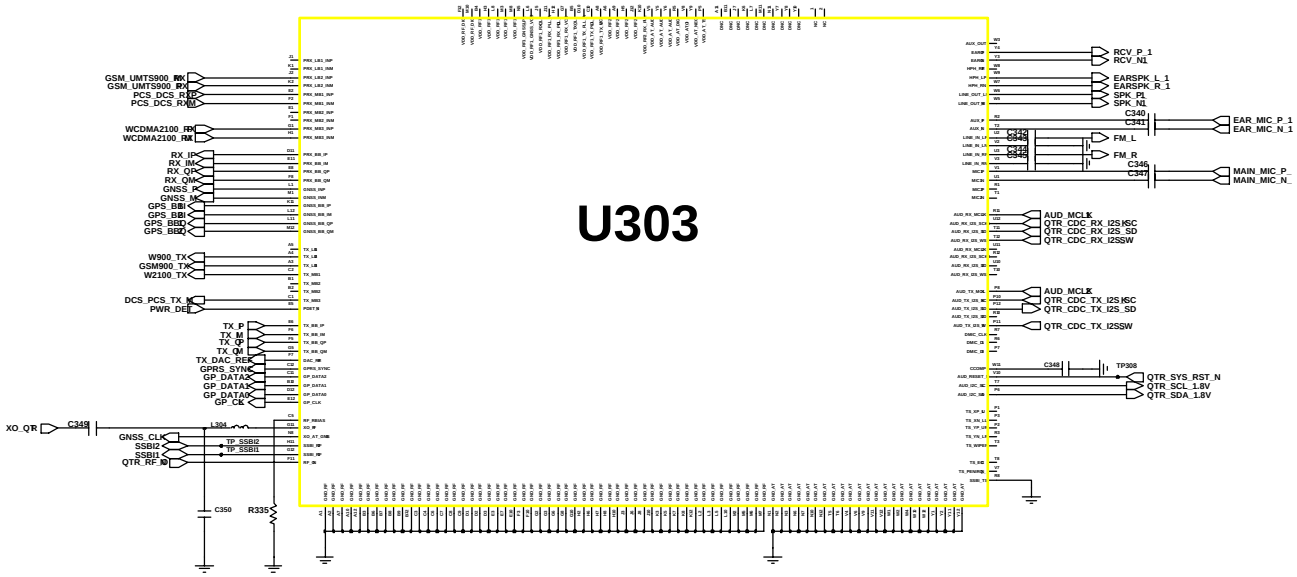

Confidential and proprietary-the contents in this service guide subject to change without prior notice.
Distribution, transmission, or infringement of any content or data from this document without Samsung's written authorization is strictly prohibited.

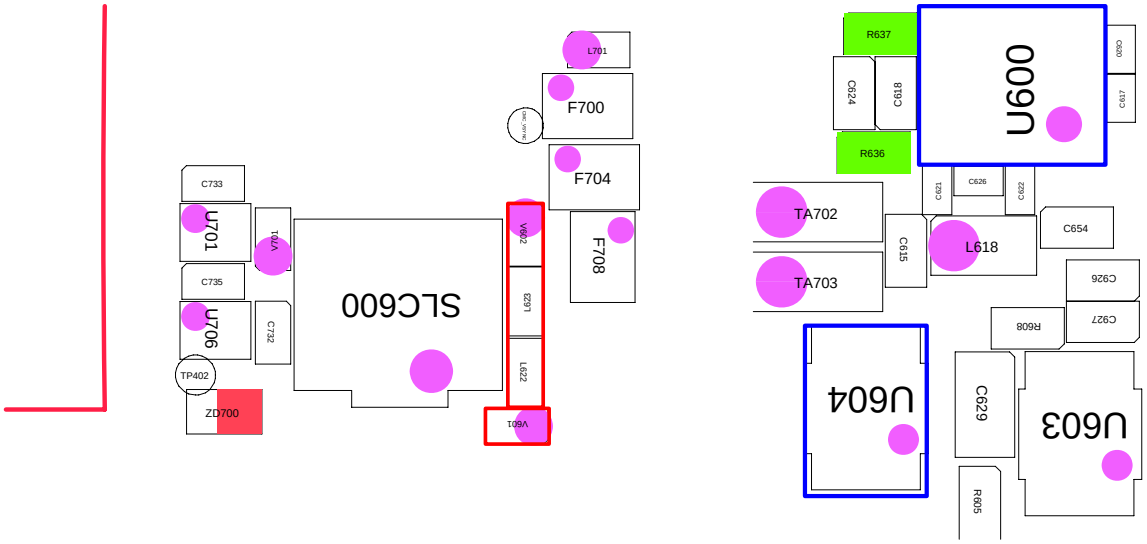

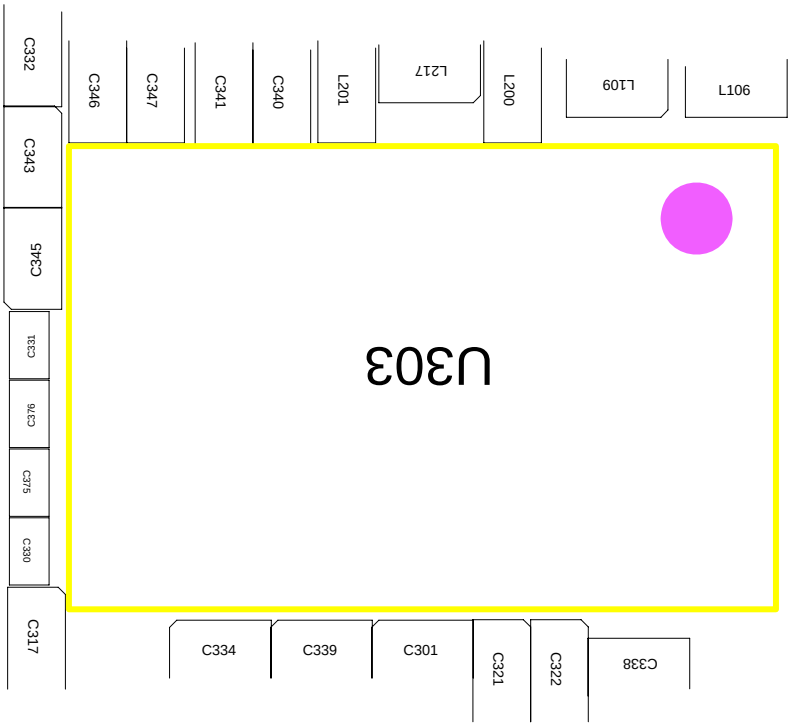

Confidential and proprietary-the contents in this service guide subject to change without prior notice.
Distribution, transmission, or infringement of any content or data from this document without Samsung's written authorization is strictly prohibited.

8-3-5.主话筒

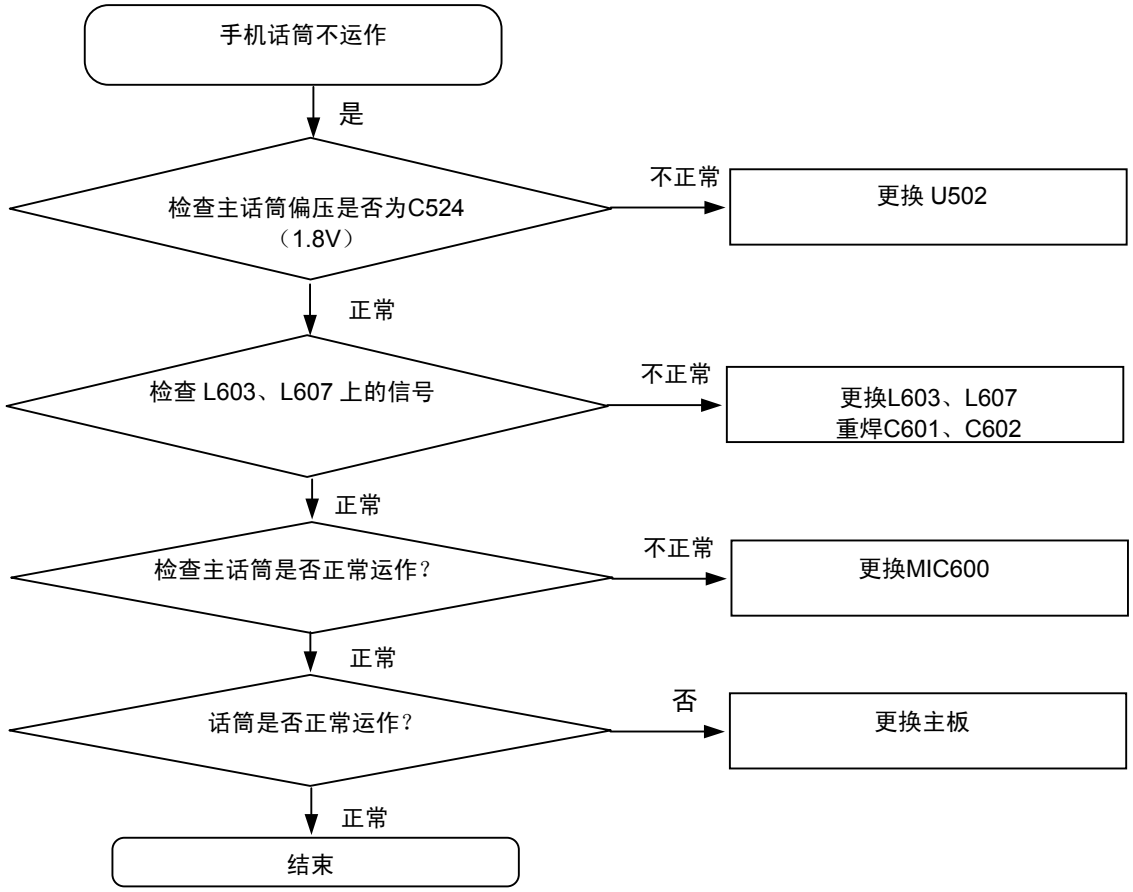

保密和所有权-本维修手册内容的变更恕不另行通知。
未经三星书面授权而发布，传送，或违背本文件中的任何内容或数据是严格禁止的。

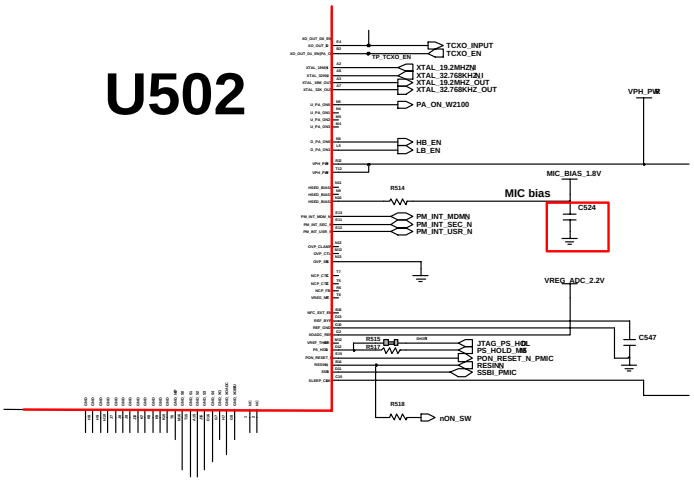

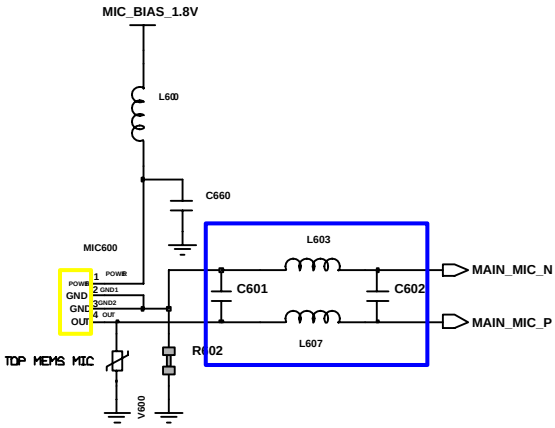

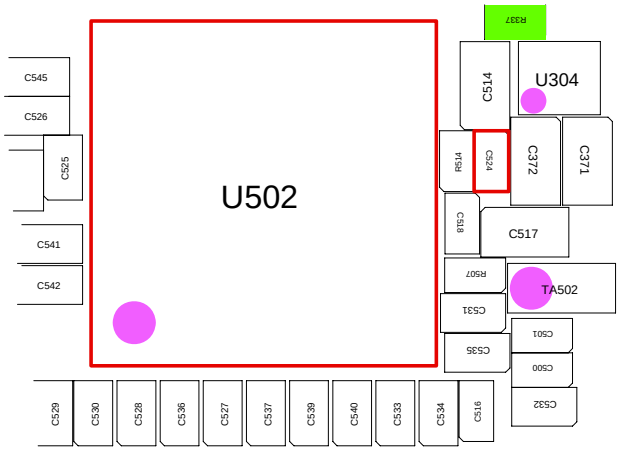

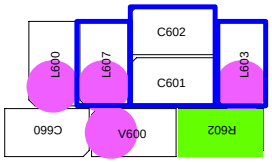

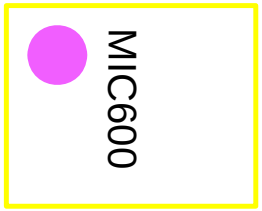

Confidential and proprietary-the contents in this service guide subject to change without prior notice.
Distribution, transmission, or infringement of any content or data from this document without Samsung's written authorization is strictly prohibited.

8-3-6.电机

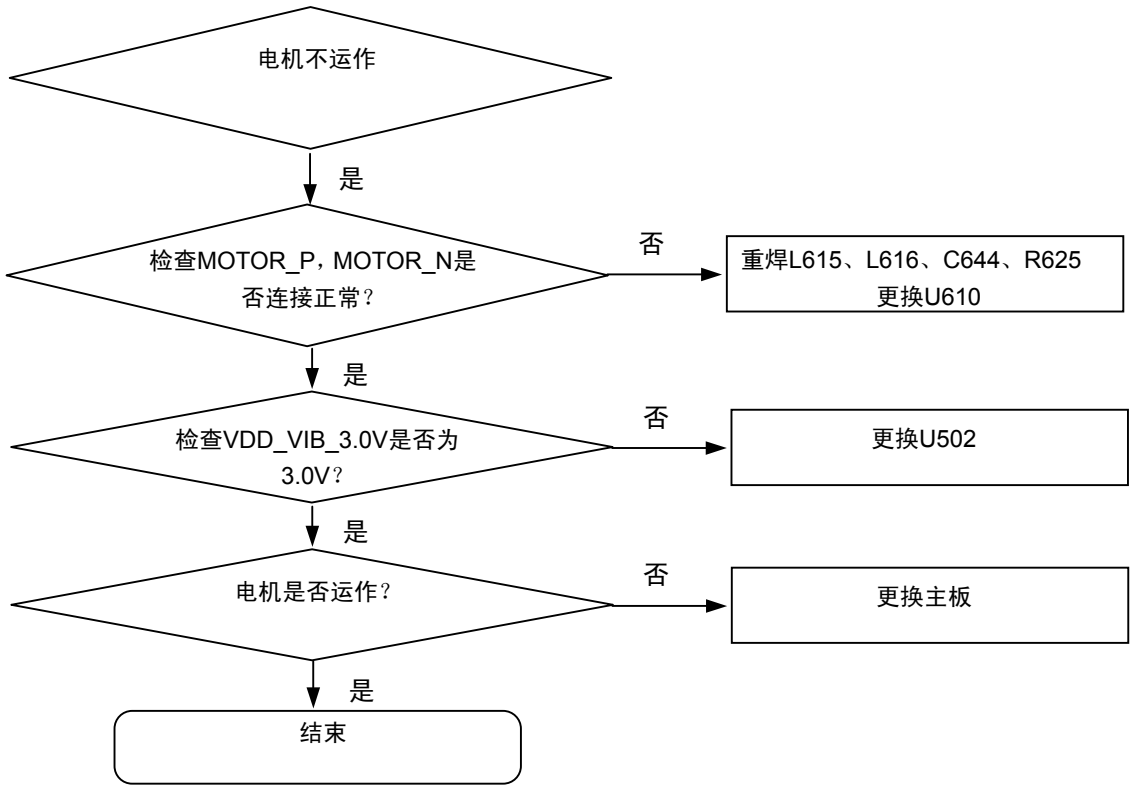

保密和所有权-本维修手册内容的变更恕不另行通知。
未经三星书面授权而发布，传送，或违背本文件中的任何内容或数据是严格禁止的。

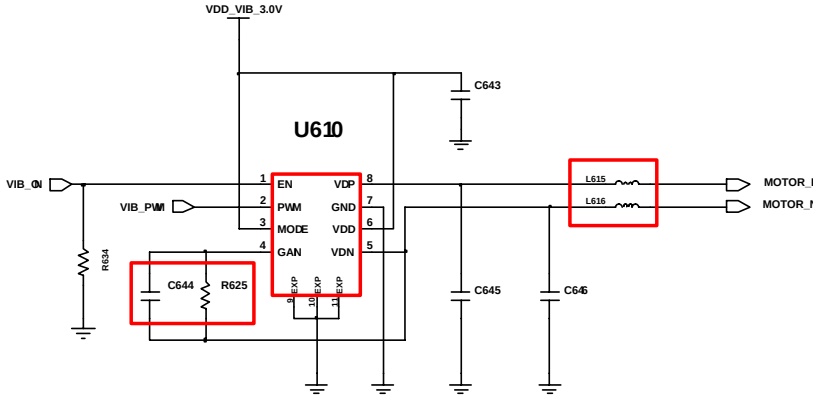

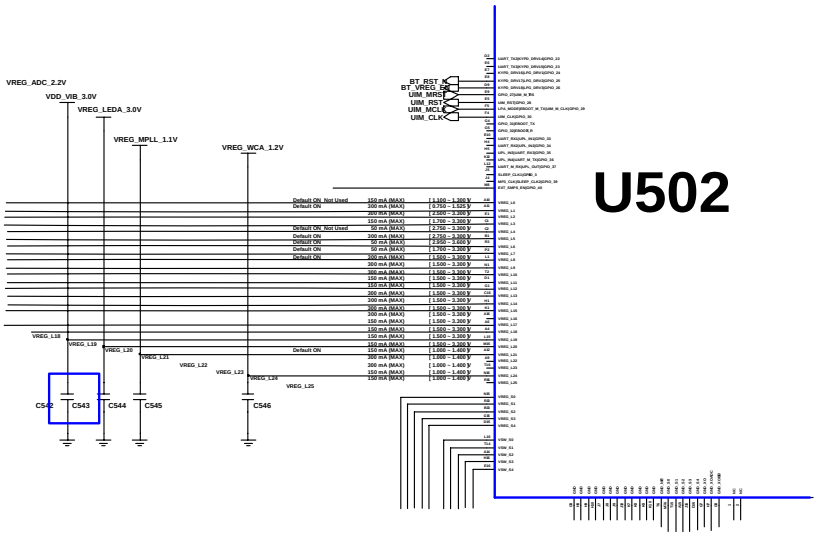

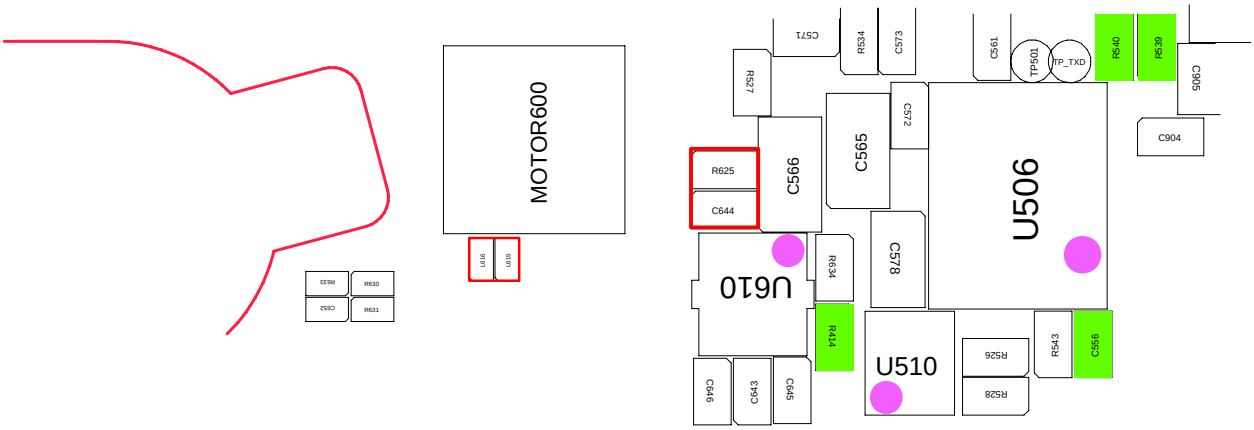

Confidential and proprietary-the contents in this service guide subject to change without prior notice.
Distribution, transmission, or infringement of any content or data from this document without Samsung's written authorization is strictly prohibited.

8-3-7.SIM卡

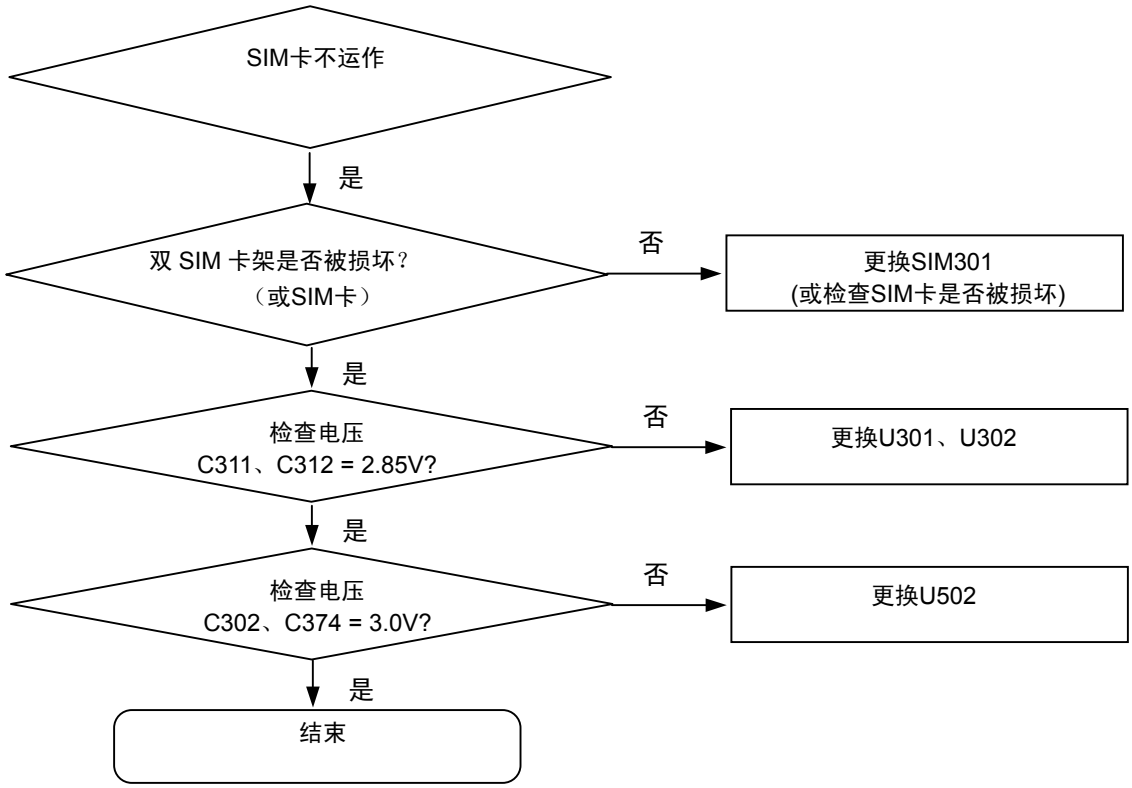

保密和所有权-本维修手册内容的变更恕不另行通知。
未经三星书面授权而发布，传送，或违背本文件中的任何内容或数据是严格禁止的。

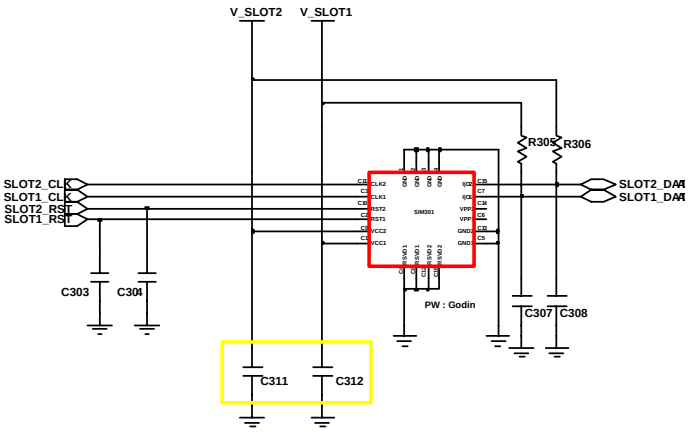

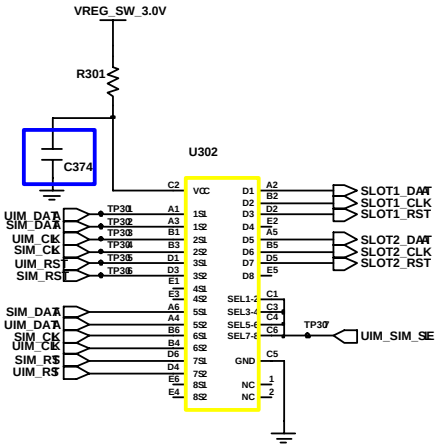

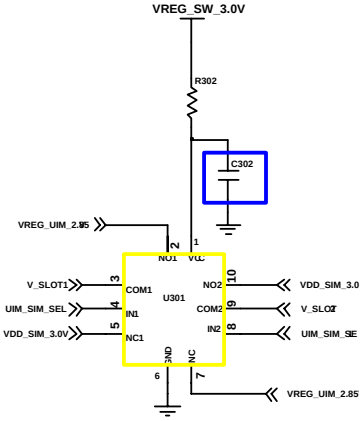

Confidential and proprietary-the contents in this service guide subject to change without prior notice.
Distribution, transmission, or infringement of any content or data from this document without Samsung's written authorization is strictly prohibited.

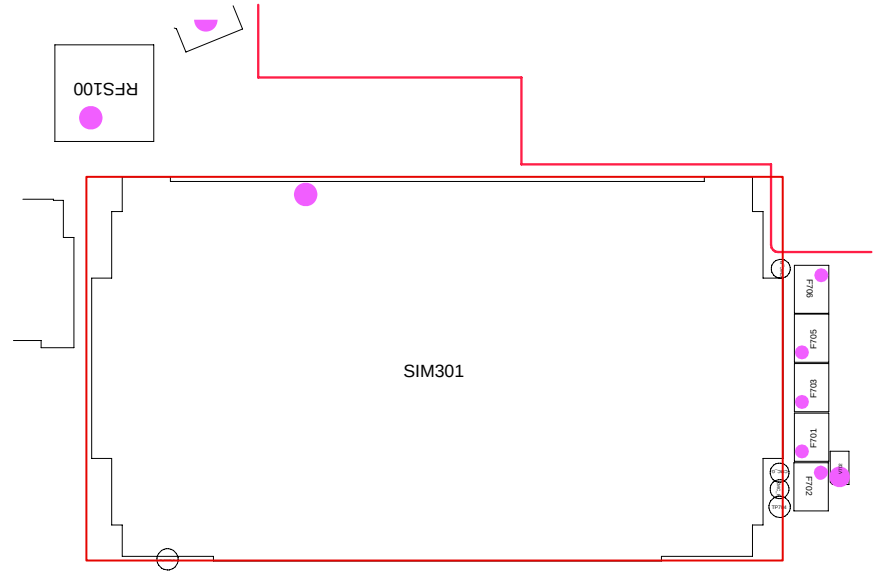

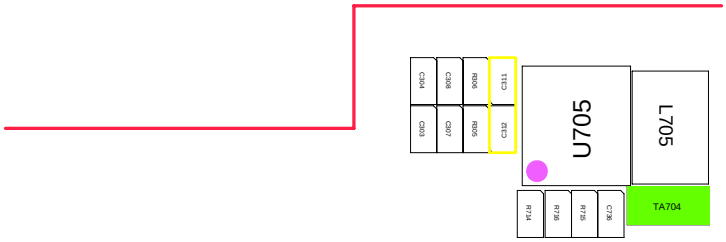

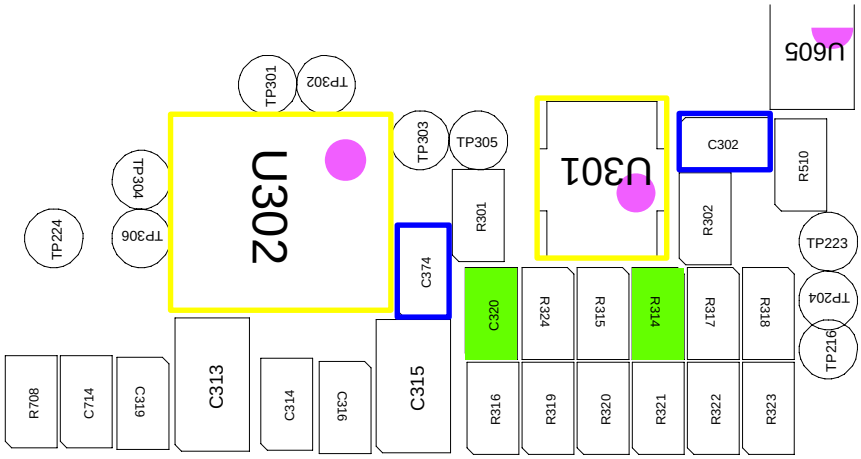

Confidential and proprietary-the contents in this service guide subject to change without prior notice.
Distribution, transmission, or infringement of any content or data from this document without Samsung's written authorization is strictly prohibited.

8-3-8.GSM900接收器（SIM1，T）

**如果检查接收链，
不仅要检查射频设备，同样需要检查电阻器，感应器和电容器。

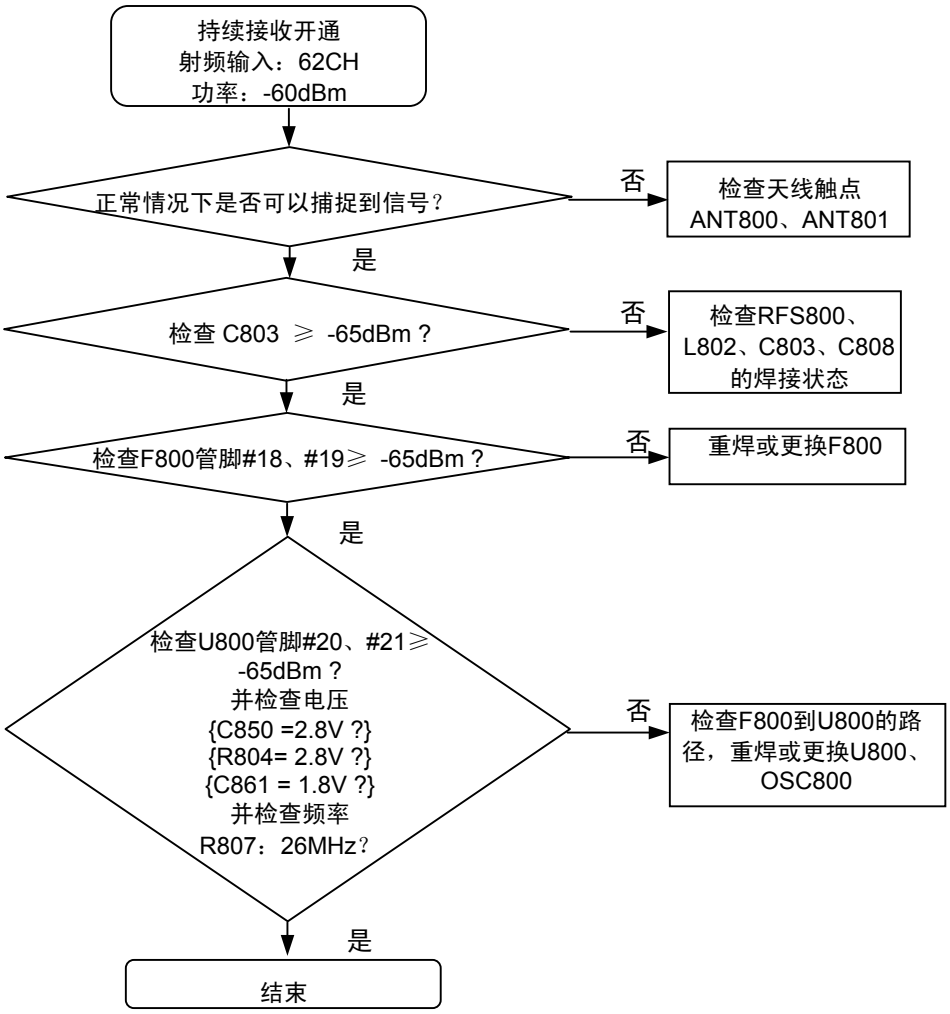

保密和所有权-本维修手册内容的变更恕不另行通知。
未经三星书面授权而发布，传送，或违背本文件中的任何内容或数据是严格禁止的。

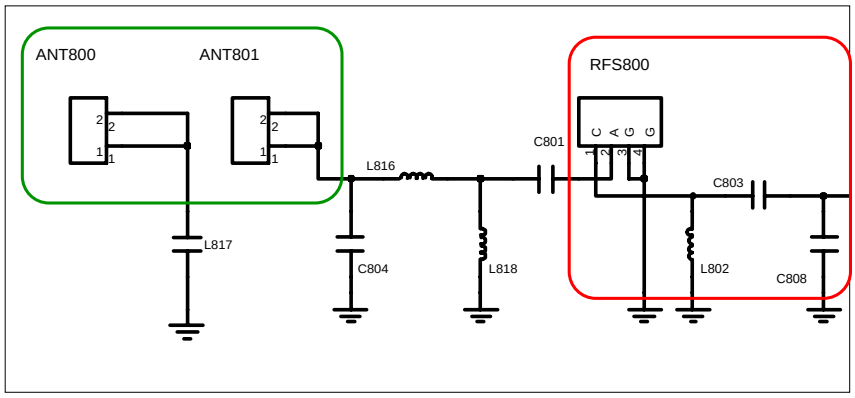

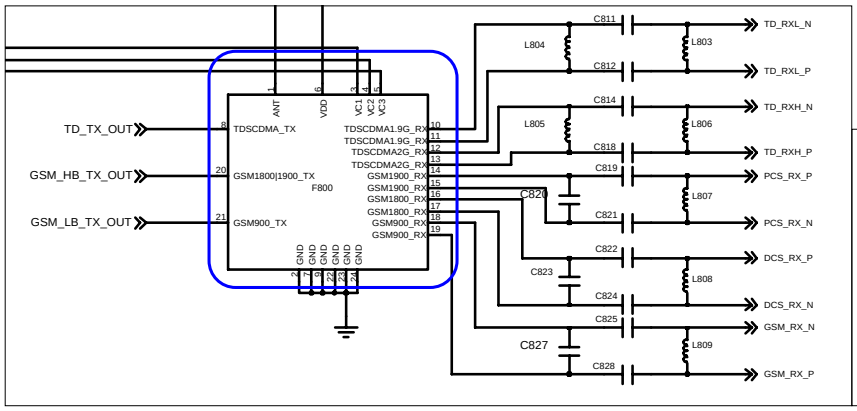

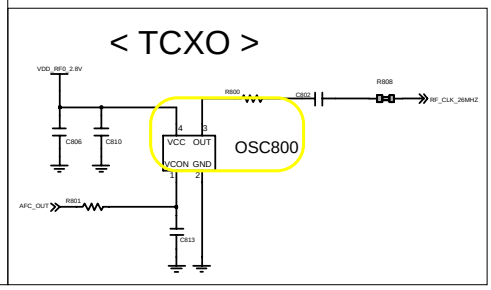

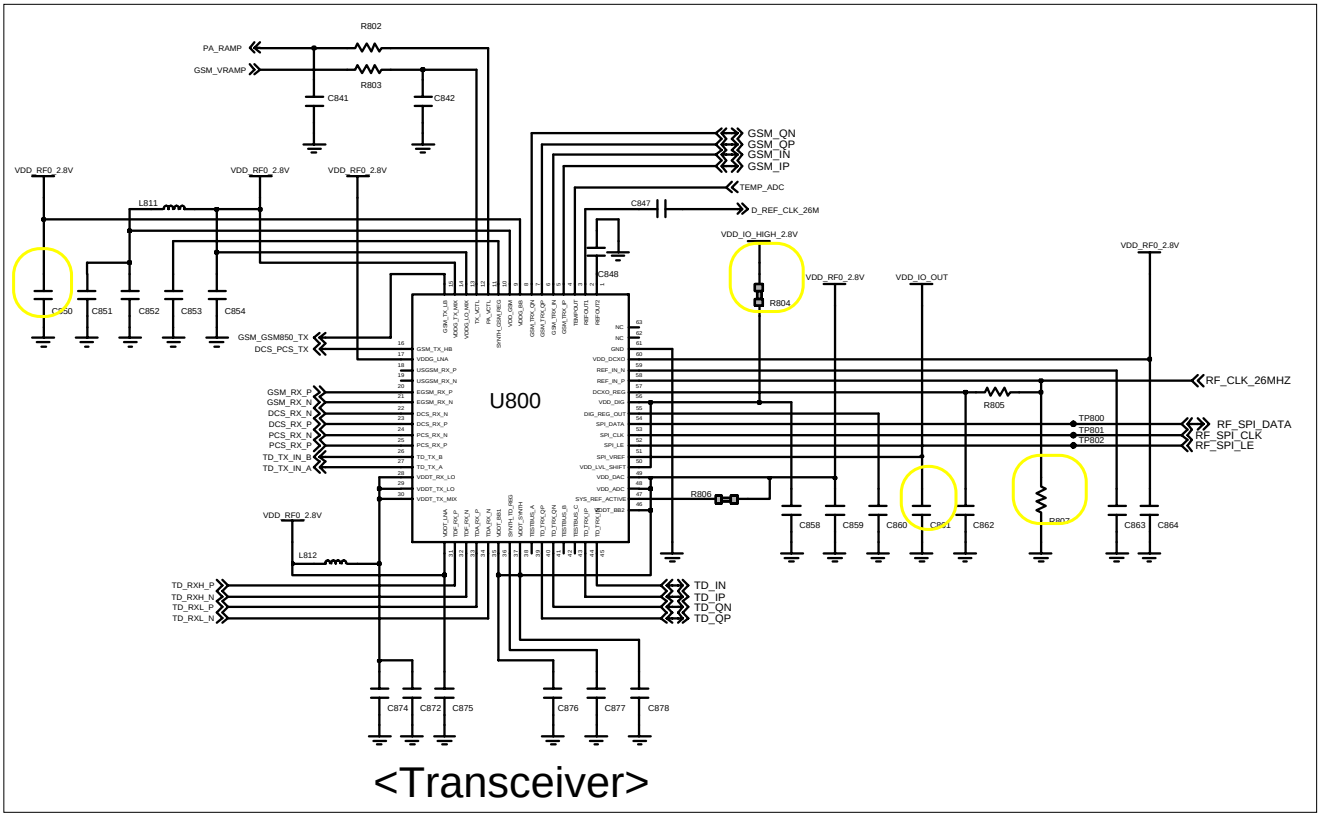

Confidential and proprietary-the contents in this service guide subject to change without prior notice.
Distribution, transmission, or infringement of any content or data from this document without Samsung's written authorization is strictly prohibited.

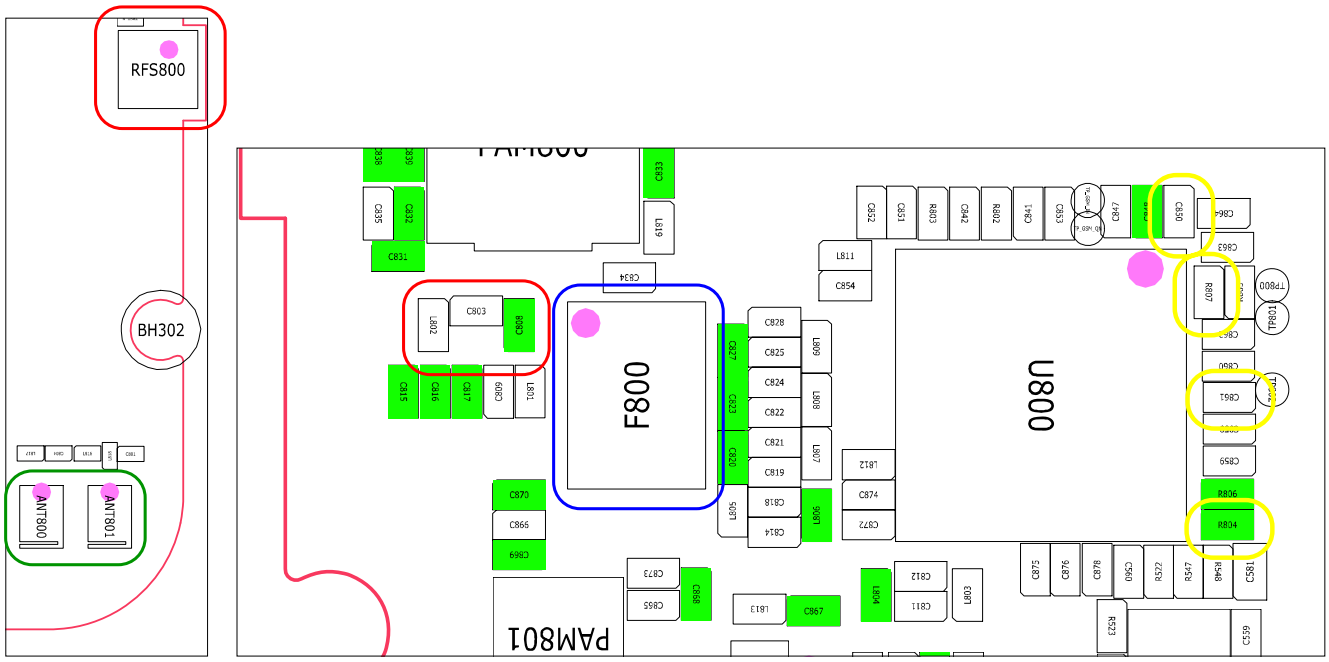

Confidential and proprietary-the contents in this service guide subject to change without prior notice.
Distribution, transmission, or infringement of any content or data from this document without Samsung's written authorization is strictly prohibited.

8-3-9.GSM900，WCDMA8 接收器（SIM2，G）

**如果检查接收链，
不仅要检查射频设备，同样需要检查电阻器，感应器和电容器。

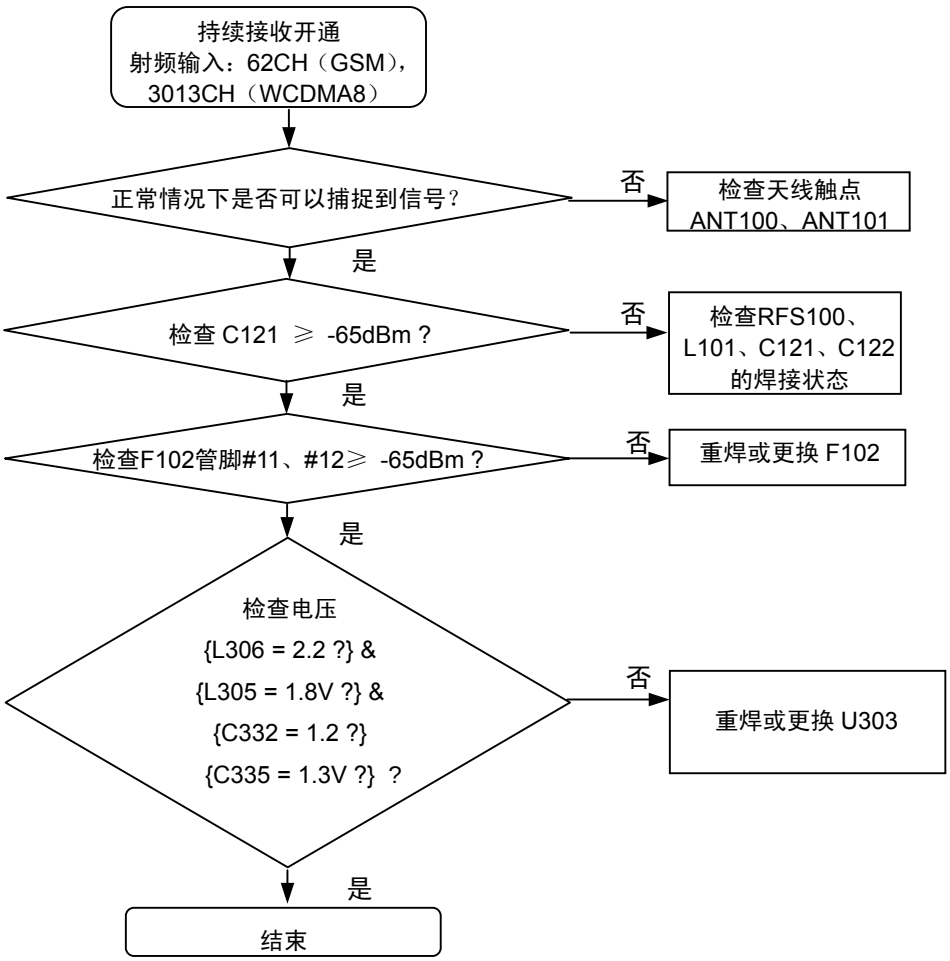

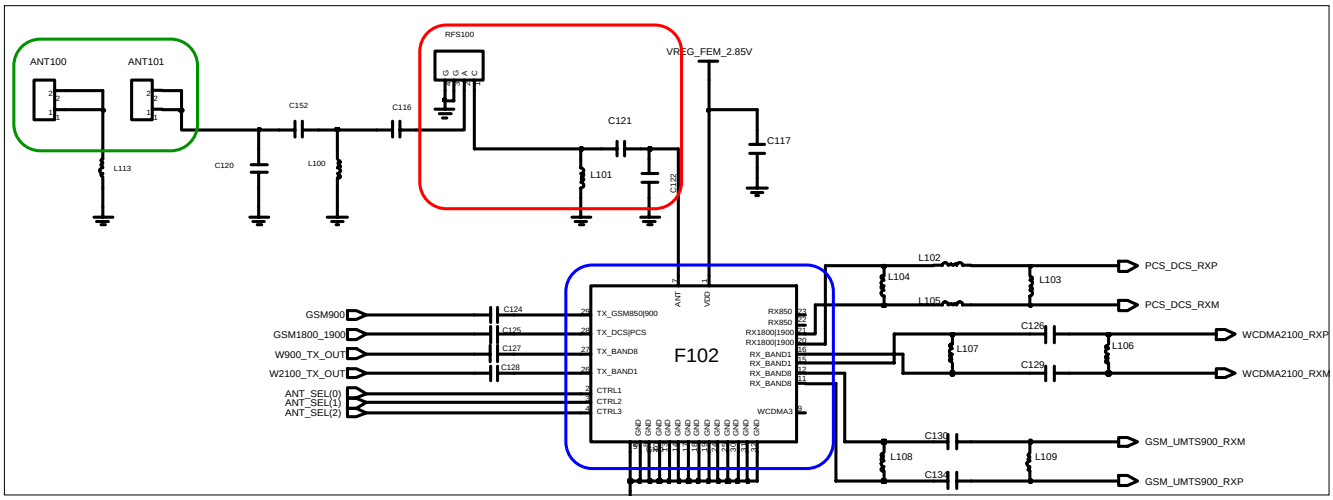

保密和所有权-本维修手册内容的变更恕不另行通知。
未经三星书面授权而发布，传送，或违背本文件中的任何内容或数据是严格禁止的。

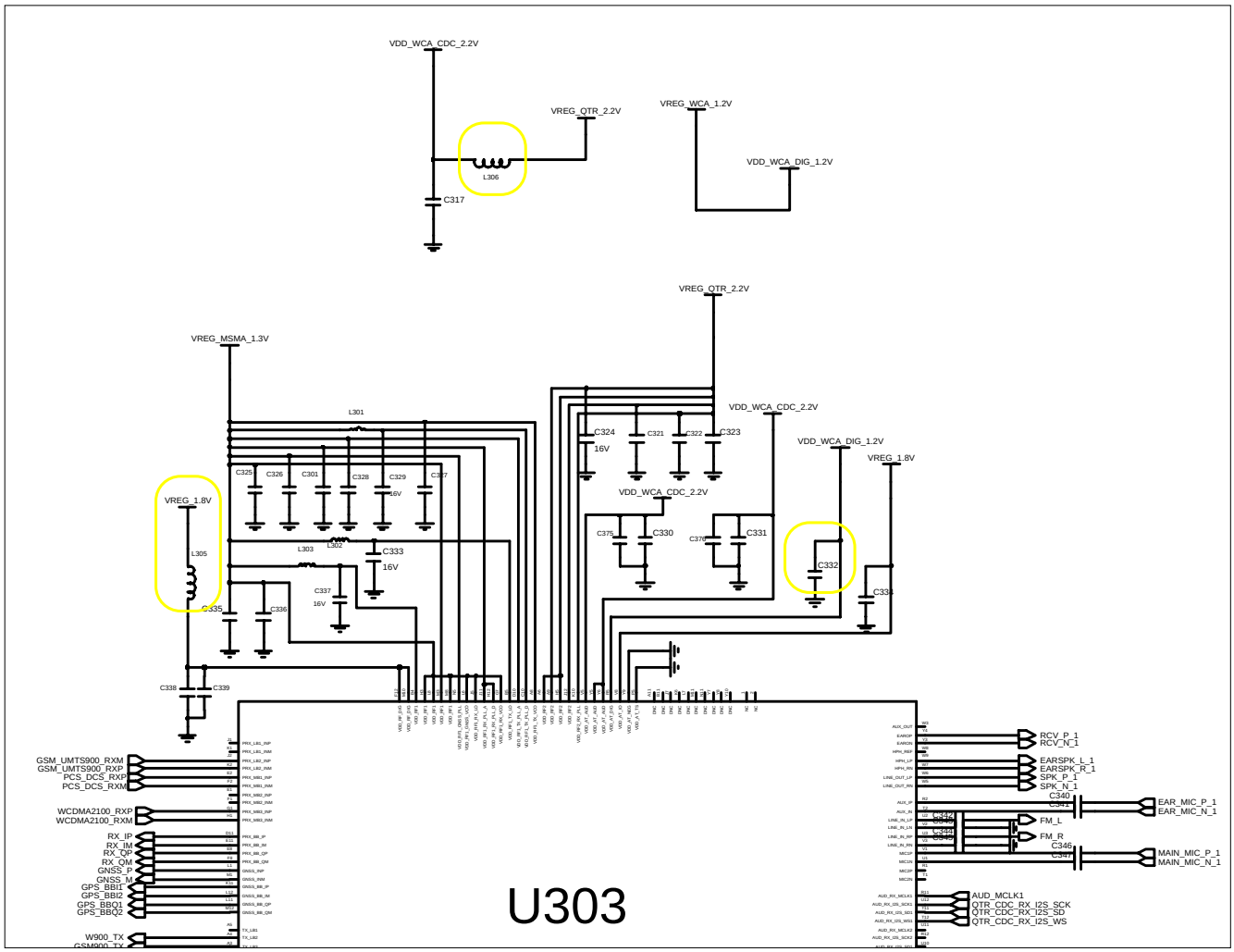

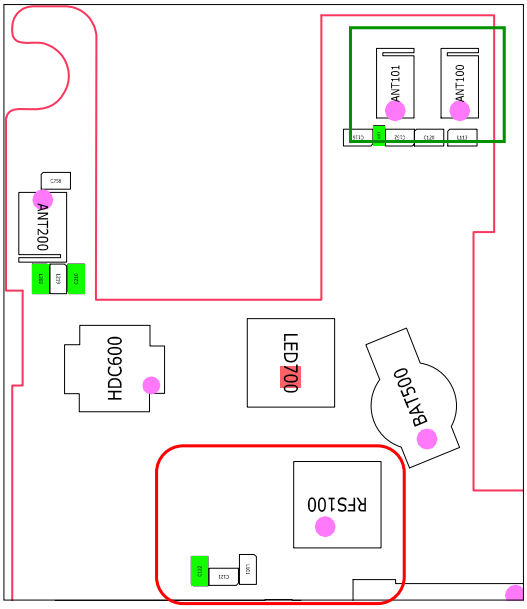

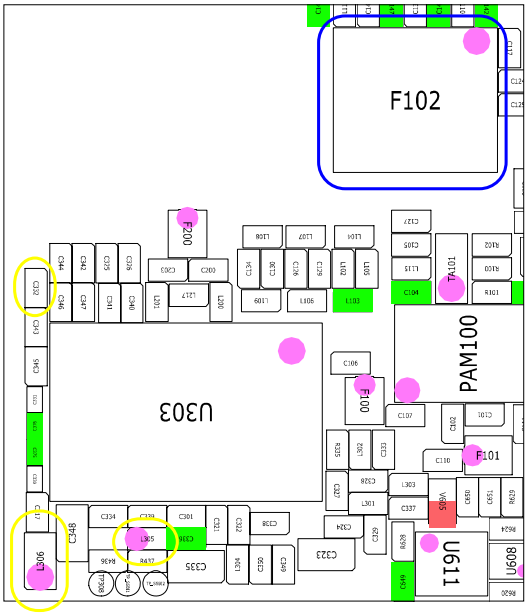

Confidential and proprietary-the contents in this service guide subject to change without prior notice.
Distribution, transmission, or infringement of any content or data from this document without Samsung's written authorization is strictly prohibited.

8-3-10.GSM1800，PCS1900 接收器（SIM1，T）

**如果检查接收链，
不仅要检查射频设备，同样需要检查电阻器，感应器和电容器。

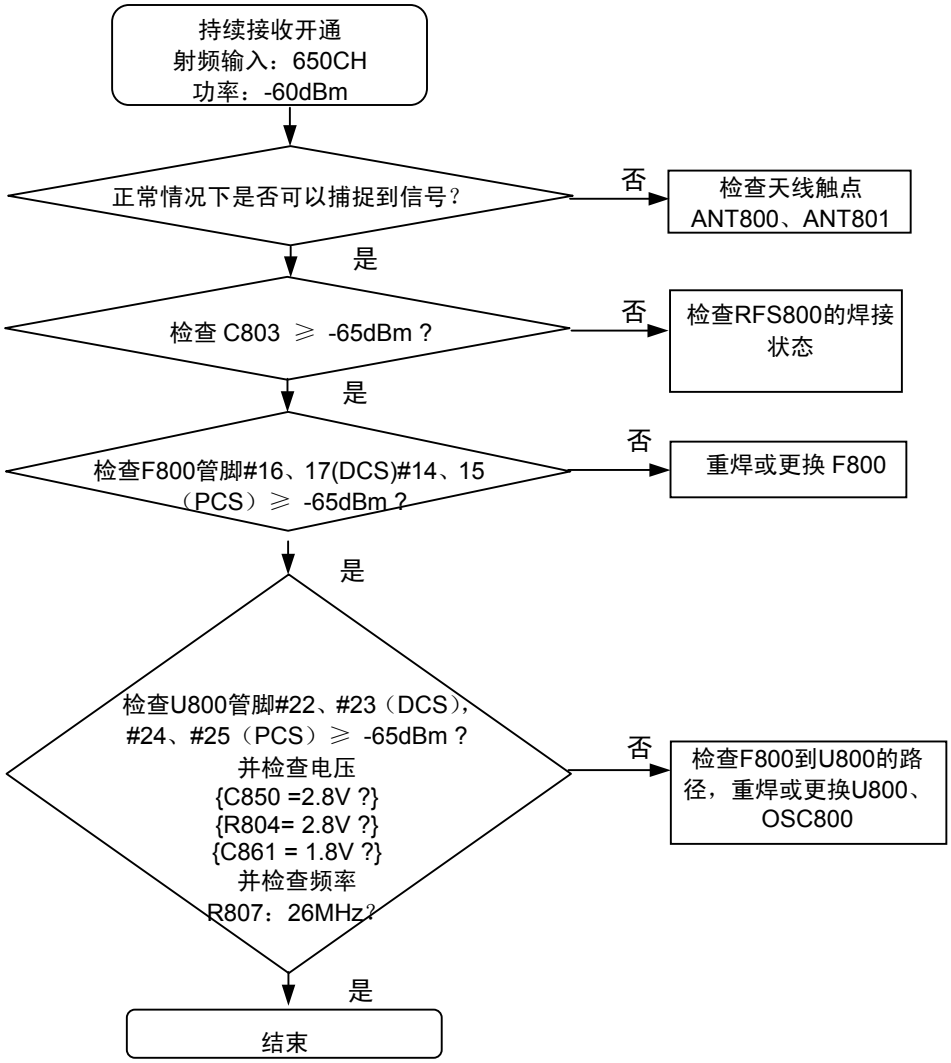

保密和所有权-本维修手册内容的变更恕不另行通知。
未经三星书面授权而发布，传送，或违背本文件中的任何内容或数据是严格禁止的。

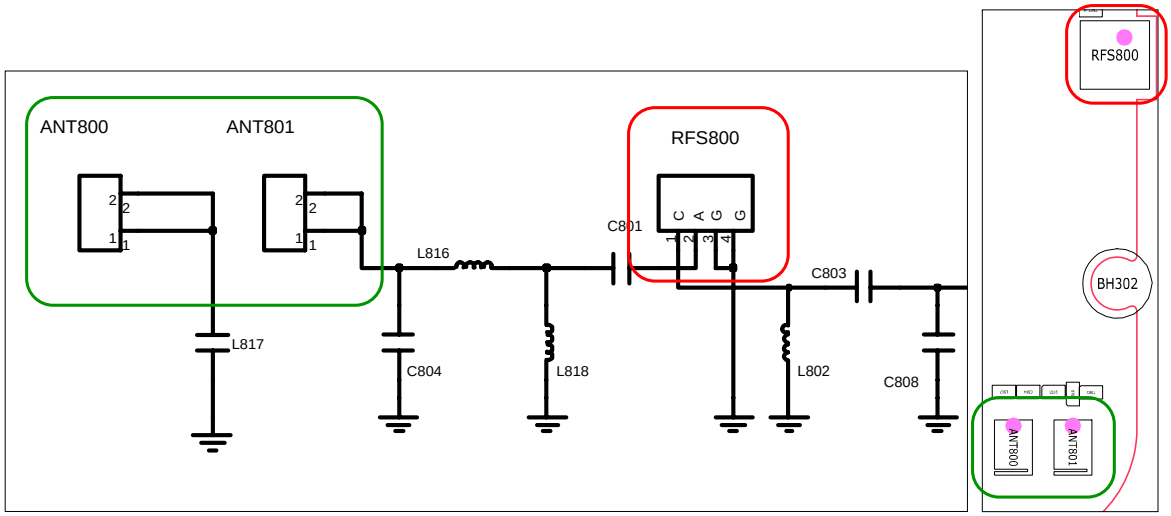

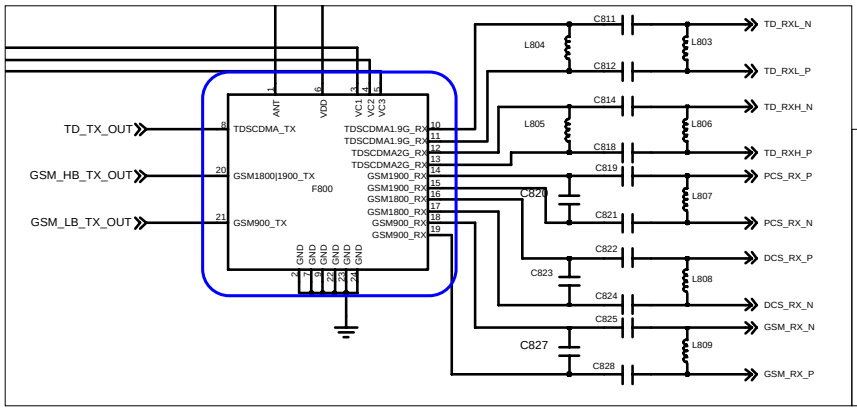

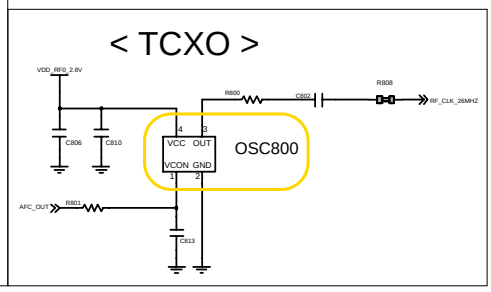

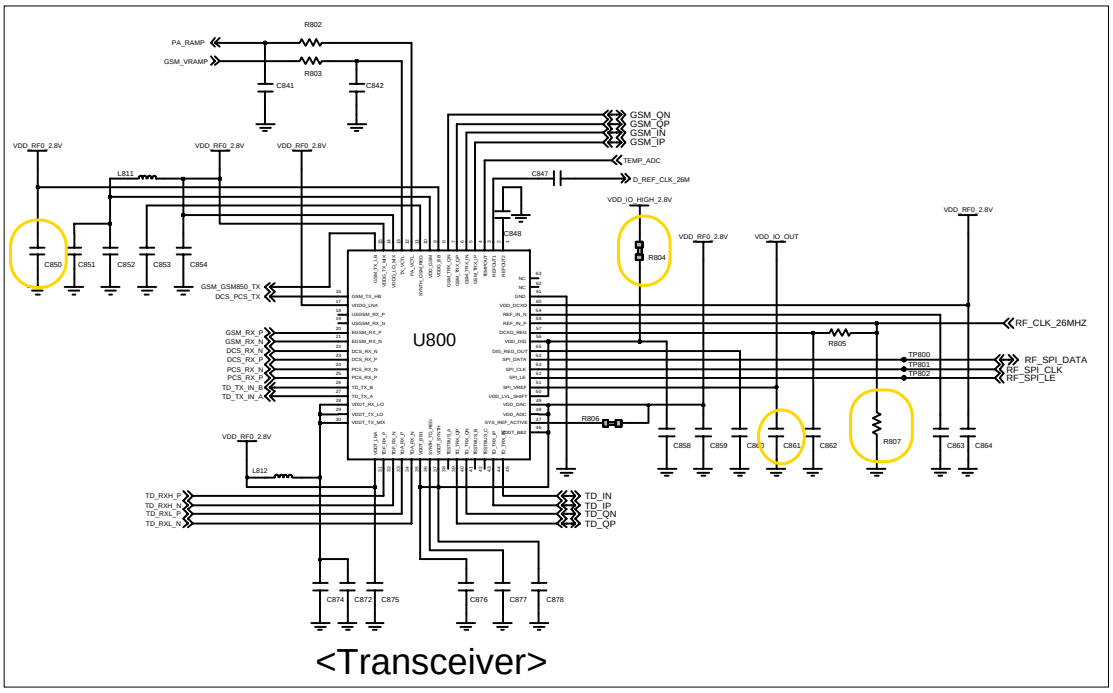

Confidential and proprietary-the contents in this service guide subject to change without prior notice.
Distribution, transmission, or infringement of any content or data from this document without Samsung's written authorization is strictly prohibited.

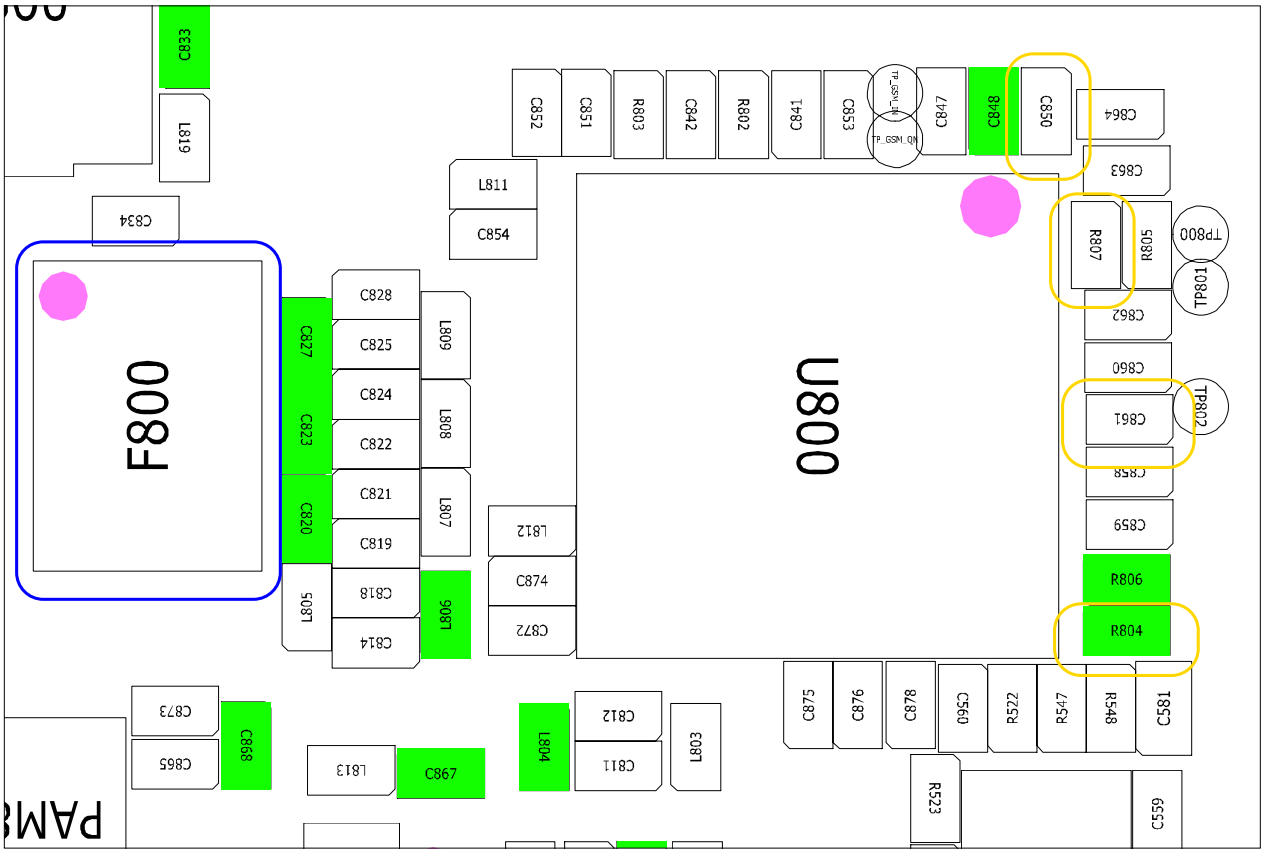

Confidential and proprietary-the contents in this service guide subject to change without prior notice.
Distribution, transmission, or infringement of any content or data from this document without Samsung's written authorization is strictly prohibited.

8-3-11.GSM1800，PCS1900接收器（SIM2，G）

**如果检查接收链，
不仅要检查射频设备，同样需要检查电阻器，感应器和电容器。

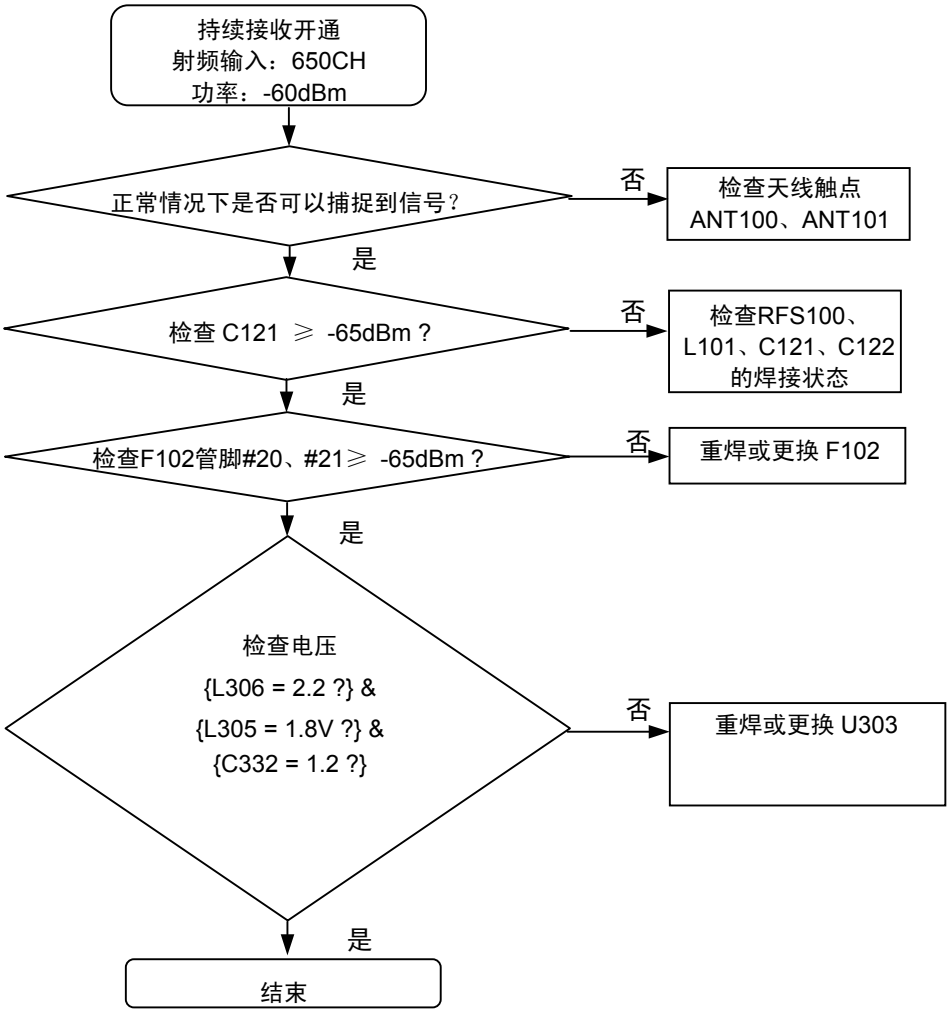

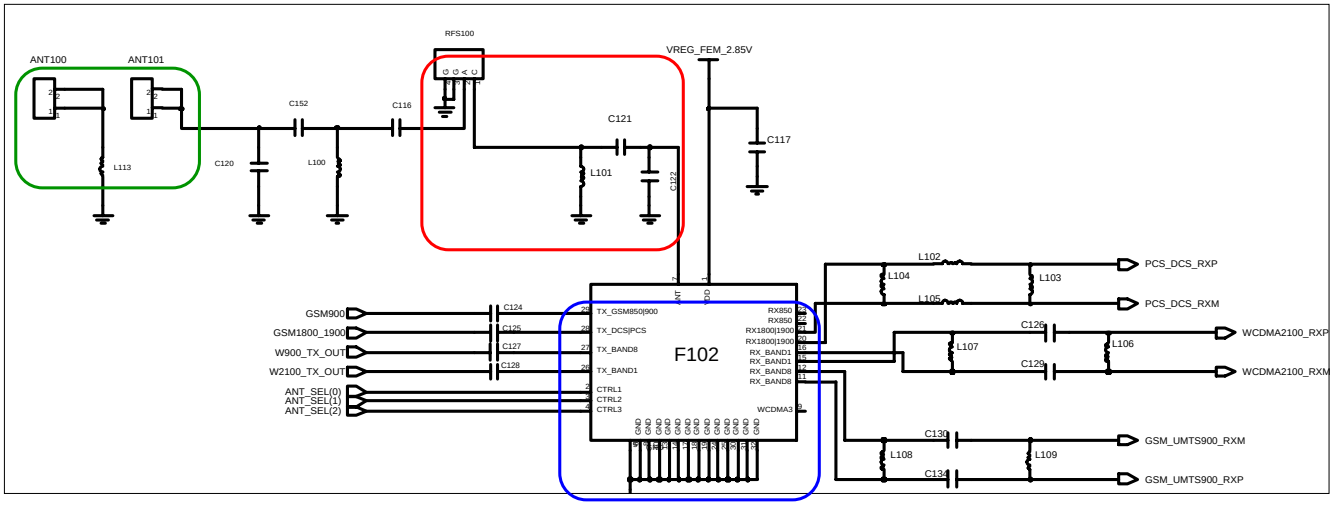

保密和所有权-本维修手册内容的变更恕不另行通知。
未经三星书面授权而发布，传送，或违背本文件中的任何内容或数据是严格禁止的。

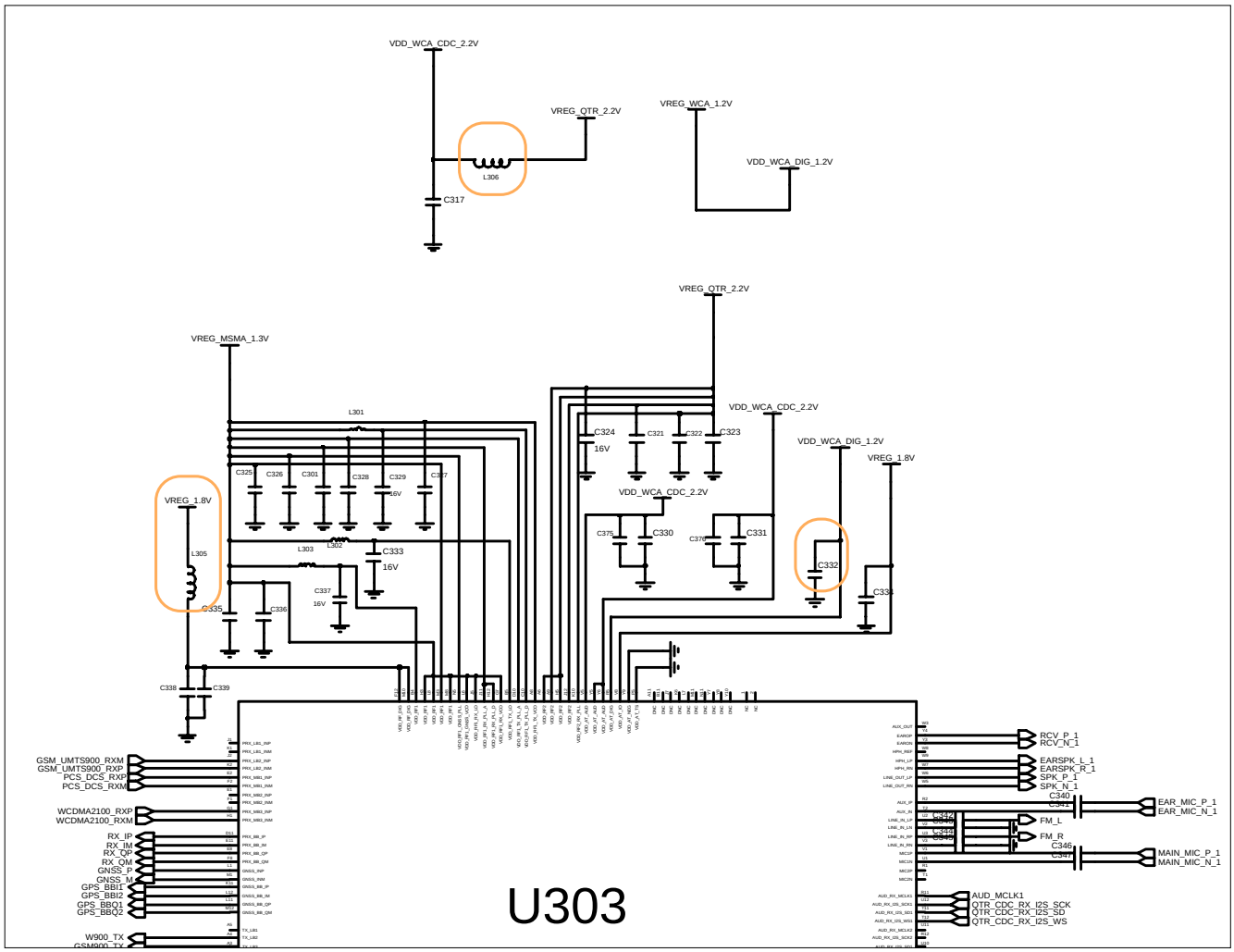

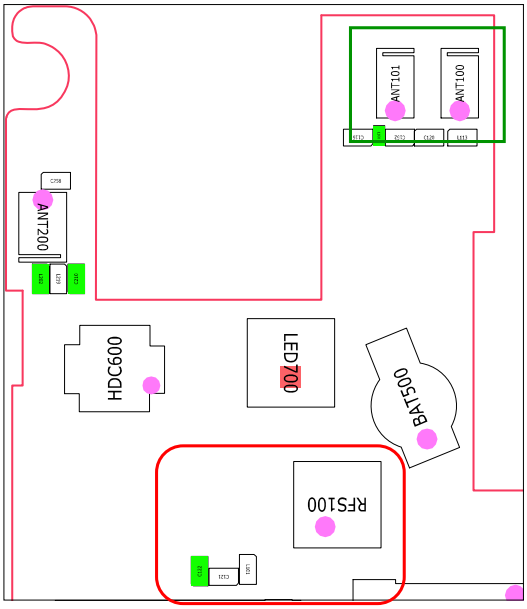

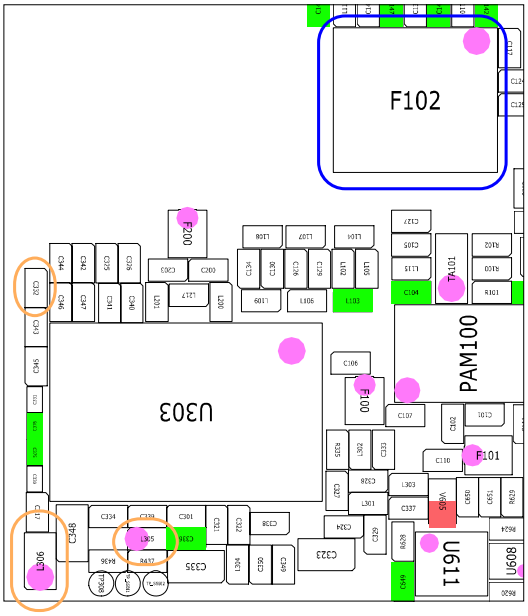

Confidential and proprietary-the contents in this service guide subject to change without prior notice.
Distribution, transmission, or infringement of any content or data from this document without Samsung's written authorization is strictly prohibited.

8-3-12.WCDMA1接收器（SIM2，G）

**如果检查接收链，
不仅要检查射频设备，同样需要检查电阻器，感应器和电容器。

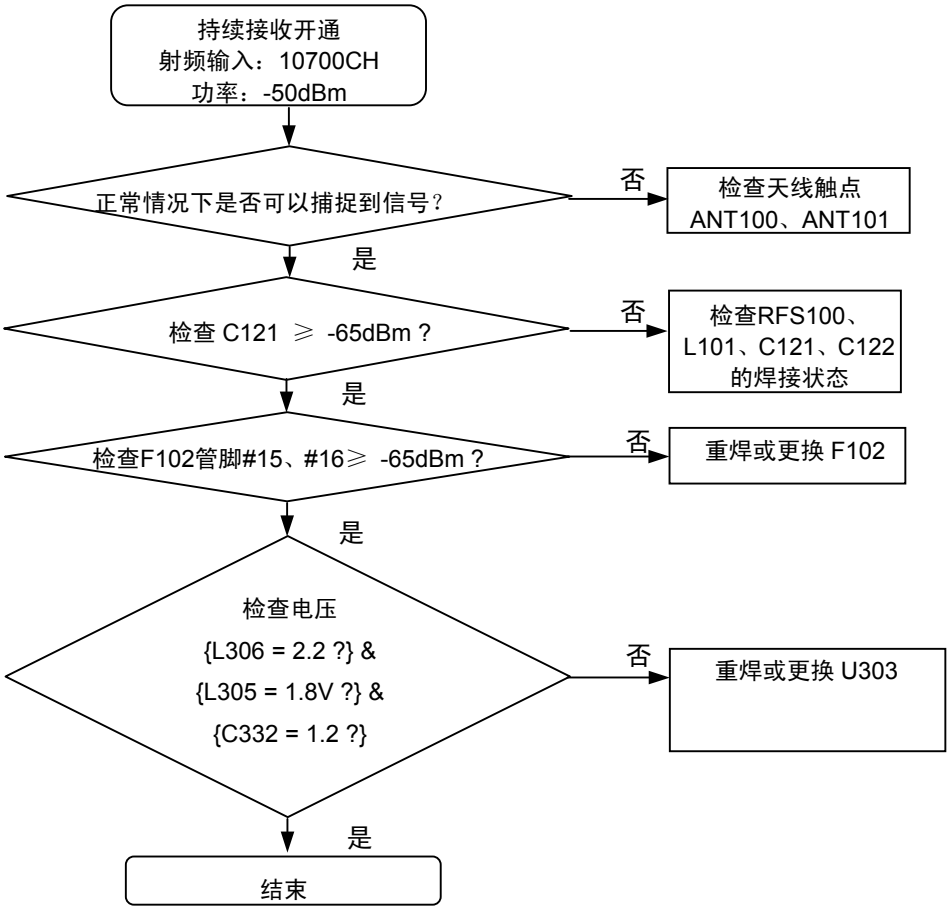

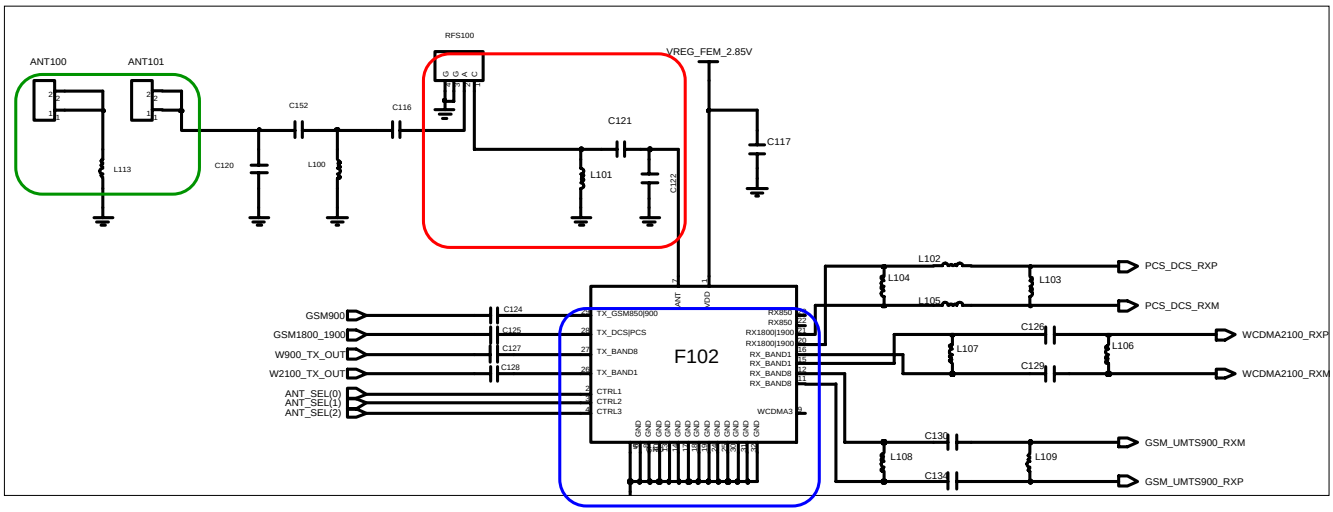

保密和所有权-本维修手册内容的变更恕不另行通知。
未经三星书面授权而发布，传送，或违背本文件中的任何内容或数据是严格禁止的。

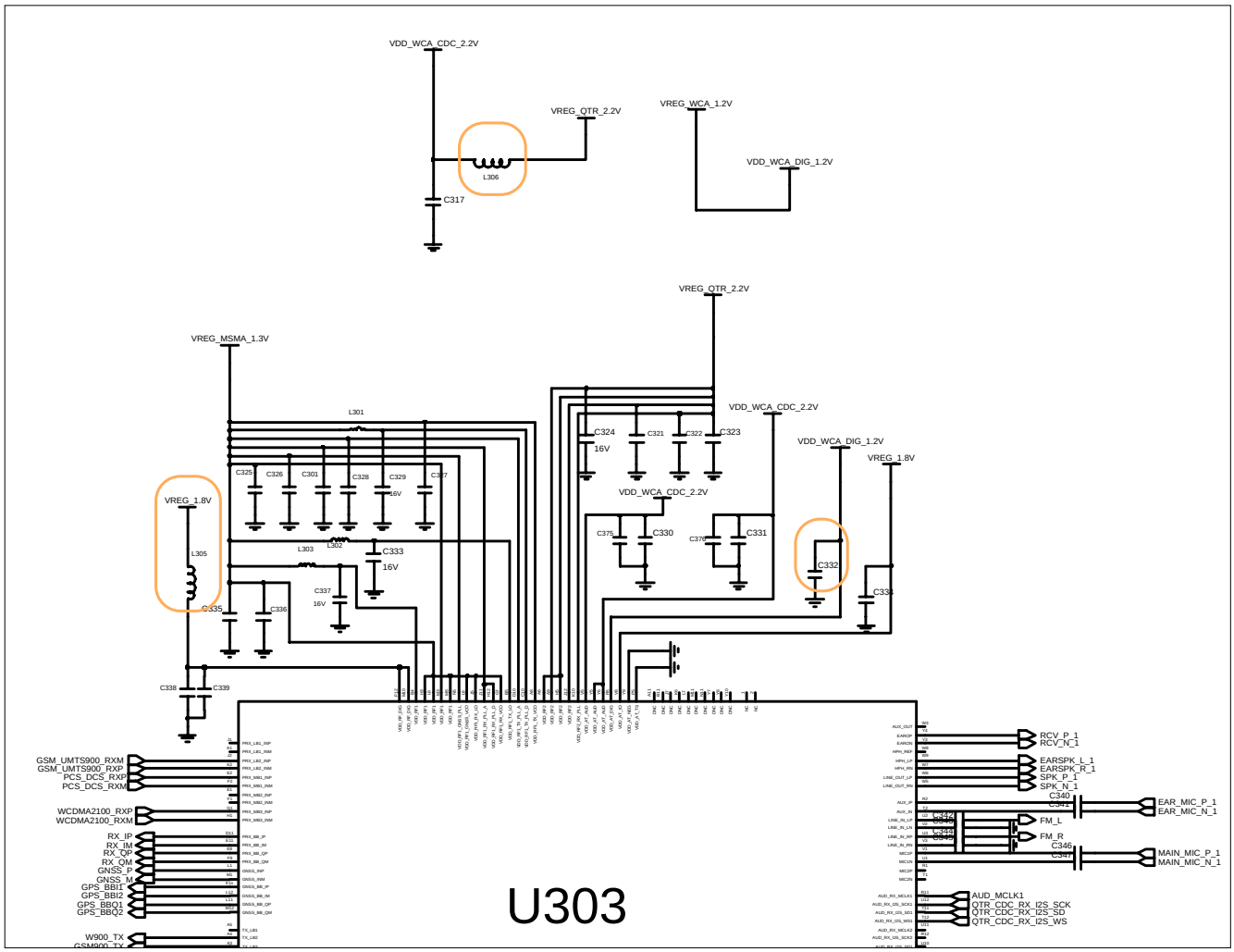

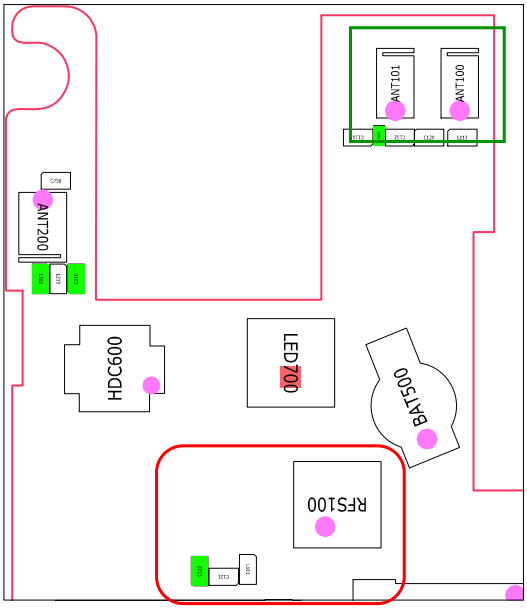

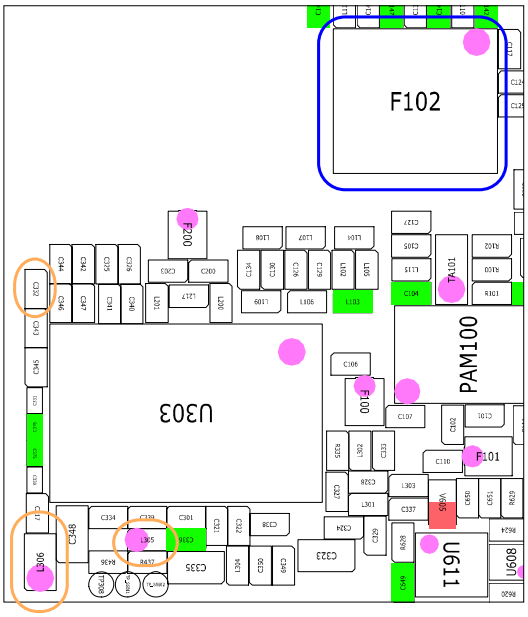

Confidential and proprietary-the contents in this service guide subject to change without prior notice.
Distribution, transmission, or infringement of any content or data from this document without Samsung's written authorization is strictly prohibited.

8-3-13.TD-SCDMA F,A 接收器（SIM1，T）

**如果检查接收链，
不仅要检查射频设备，同样需要检查电阻器，感应器和电容器。

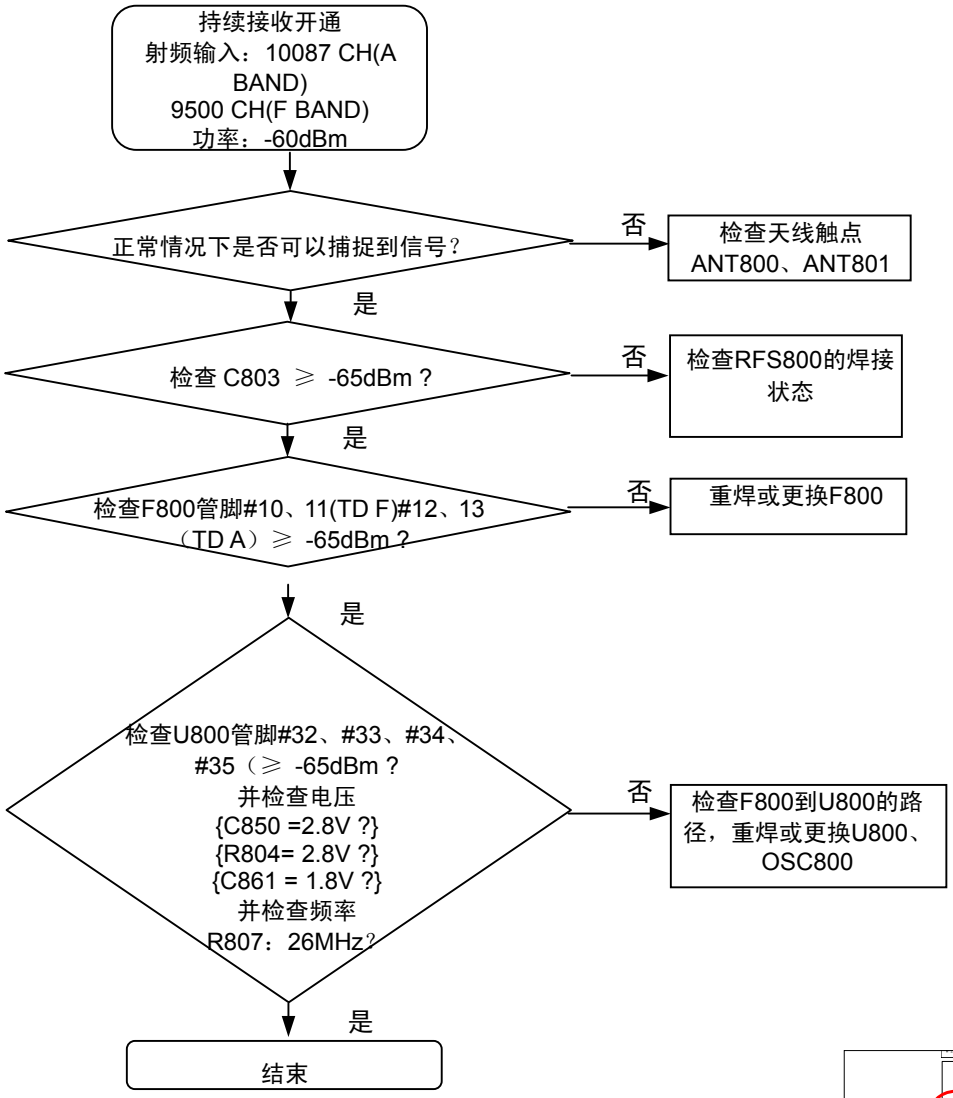

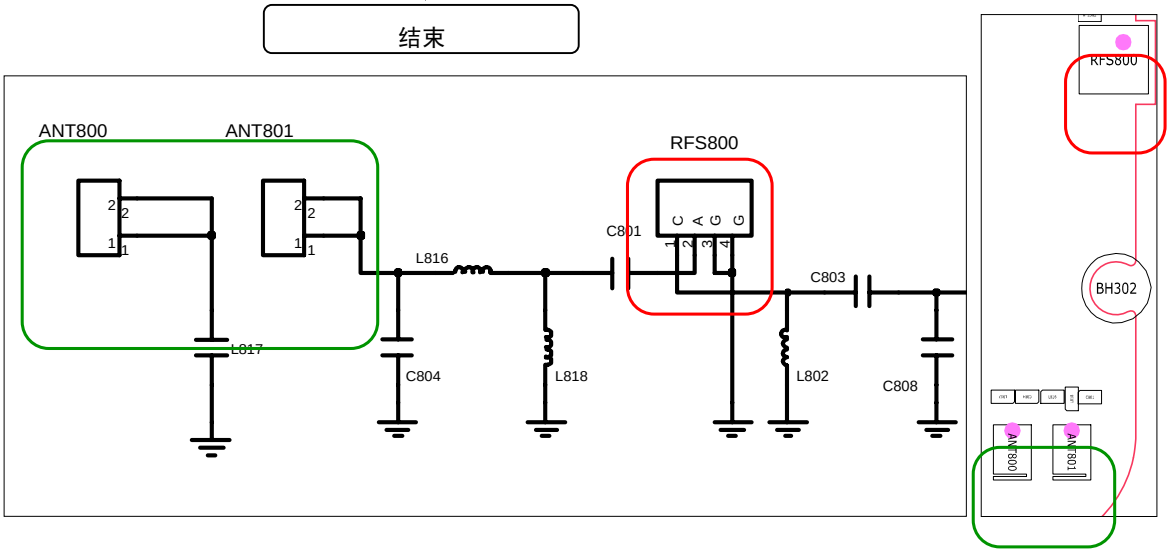

保密和所有权-本维修手册内容的变更恕不另行通知。
未经三星书面授权而发布，传送，或违背本文件中的任何内容或数据是严格禁止的。

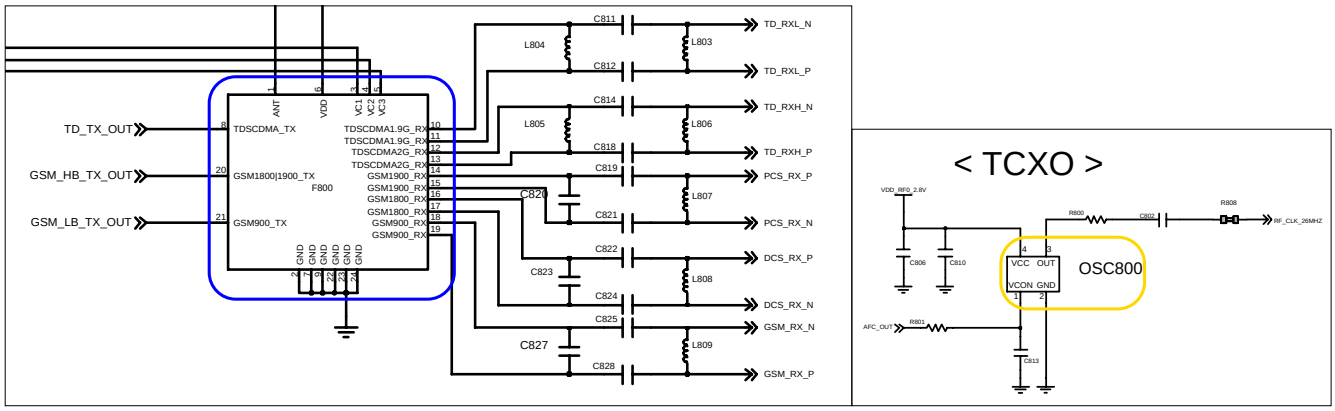

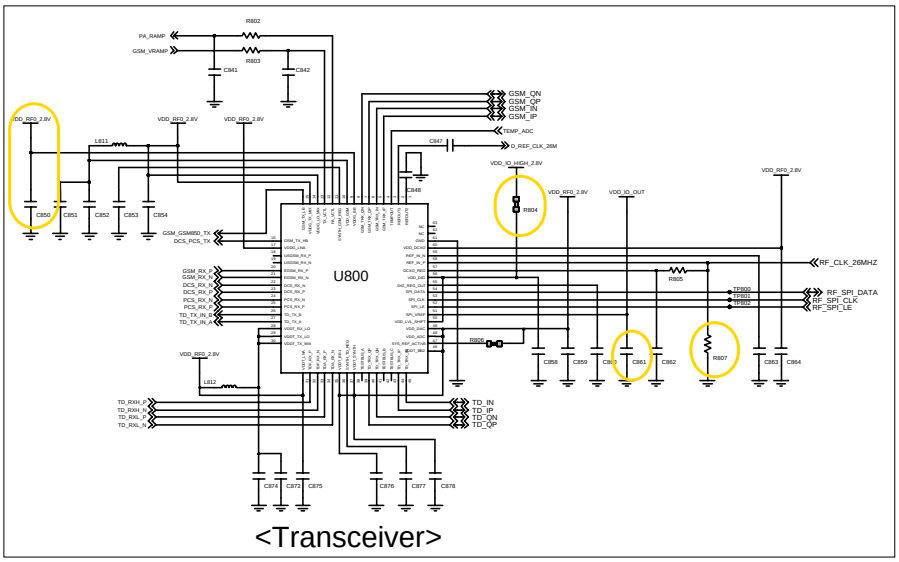

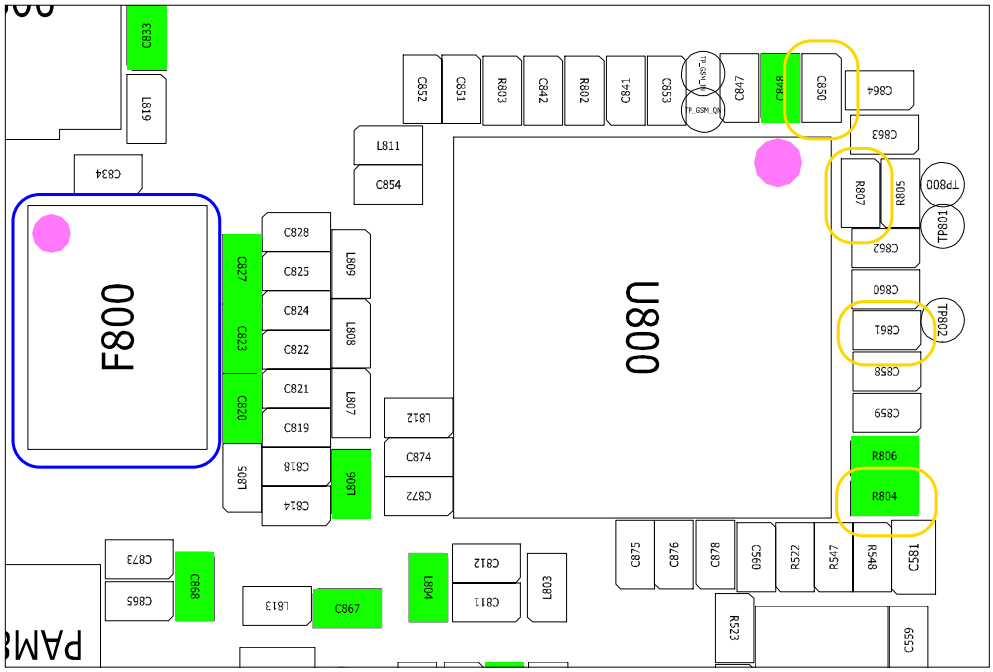

Confidential and proprietary-the contents in this service guide subject to change without prior notice.
Distribution, transmission, or infringement of any content or data from this document without Samsung's written authorization is strictly prohibited.

8-3-14.GSM900发射器（SIM1，T）

**如果检查发射链，
不仅要检查射频设备，同样需要检查电阻器，感应器和电容器。

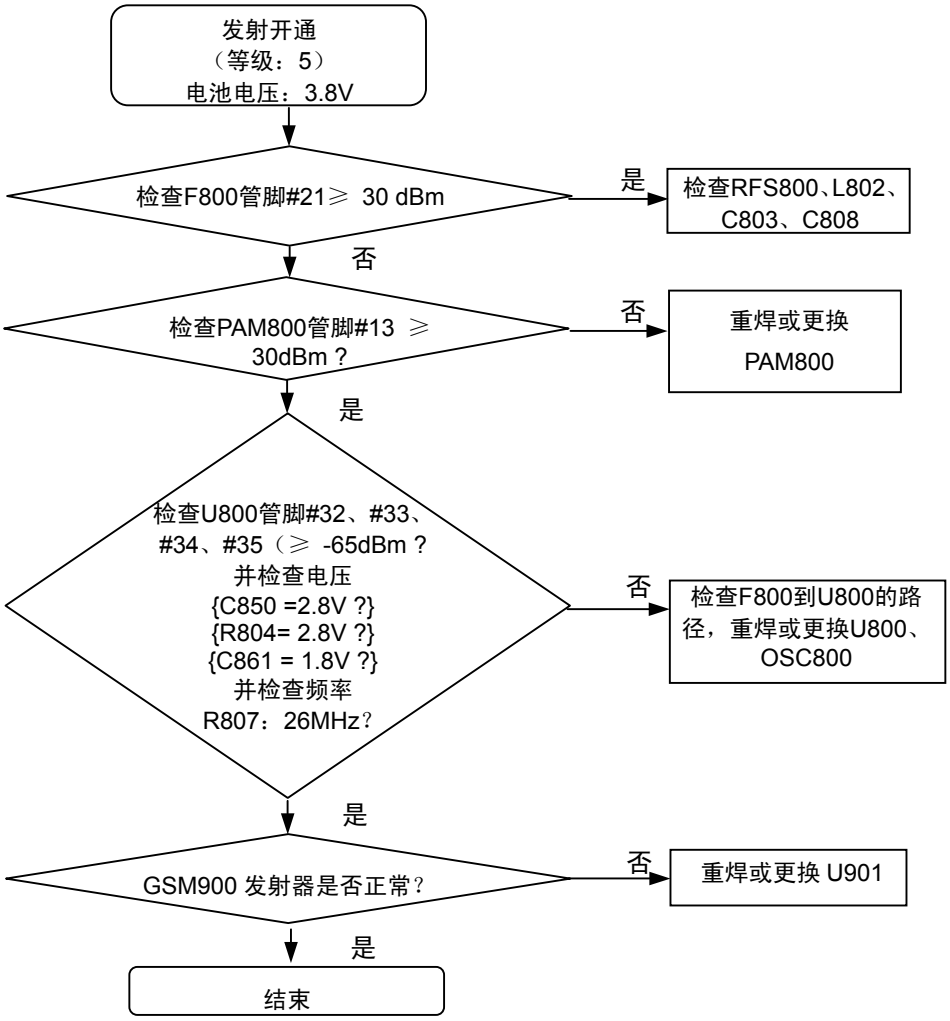

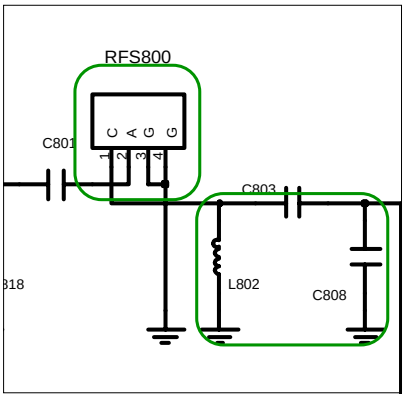

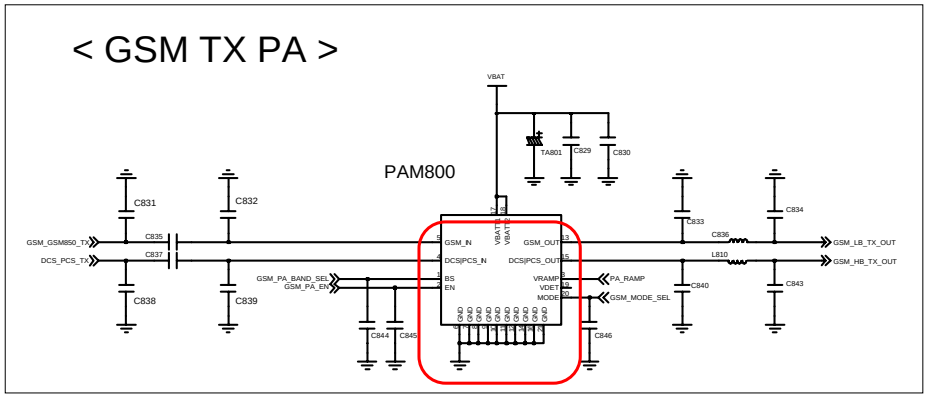

保密和所有权-本维修手册内容的变更恕不另行通知。
未经三星书面授权而发布，传送，或违背本文件中的任何内容或数据是严格禁止的。

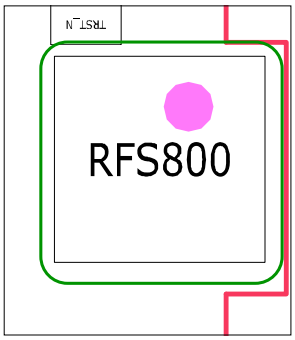

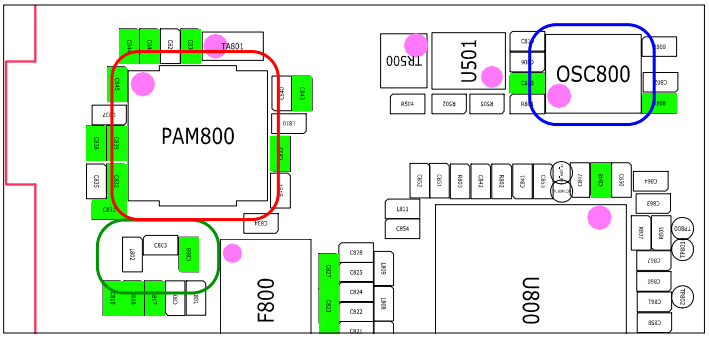

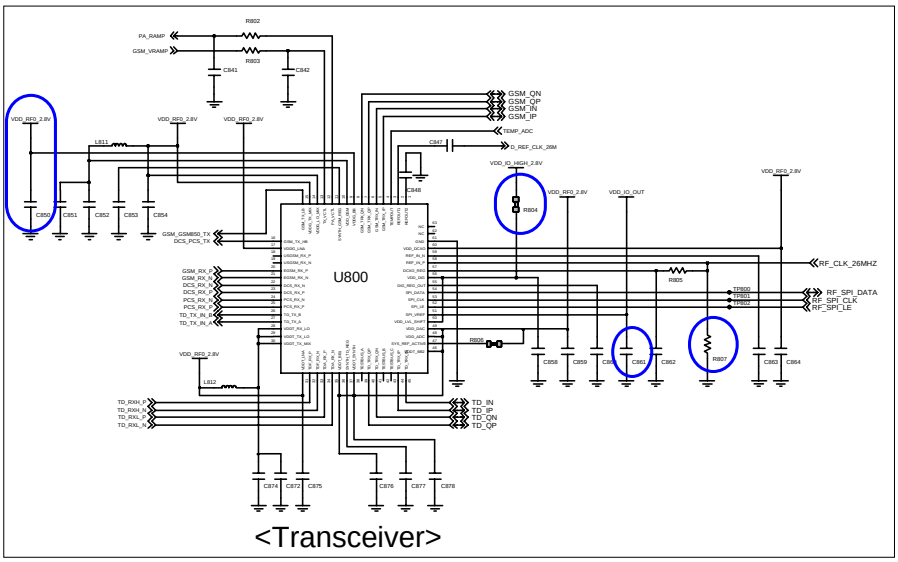

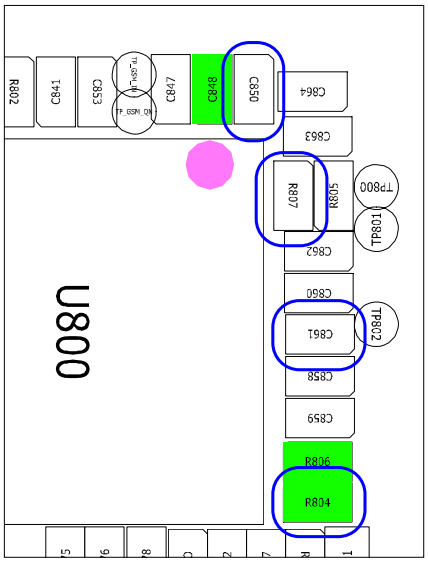

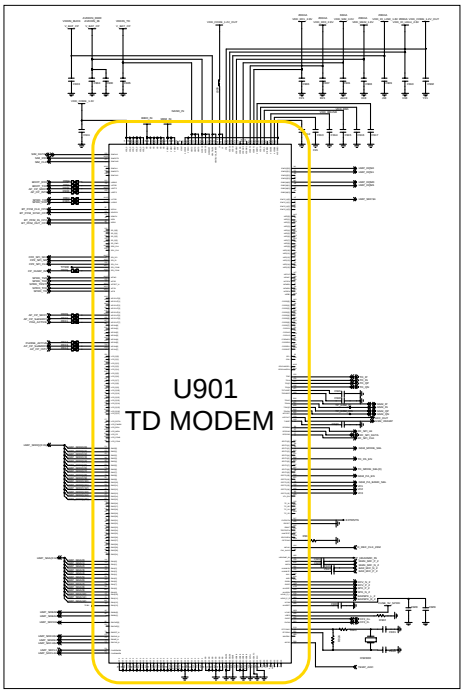

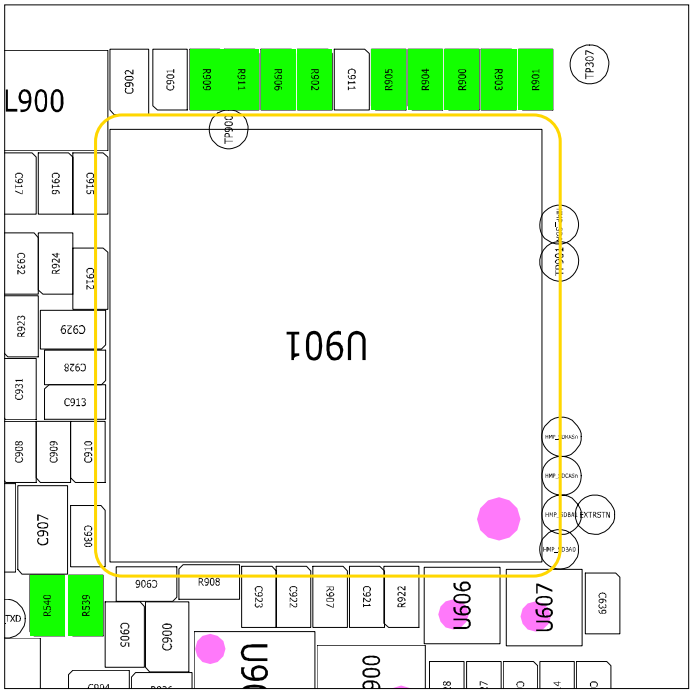

Confidential and proprietary-the contents in this service guide subject to change without prior notice.
Distribution, transmission, or infringement of any content or data from this document without Samsung's written authorization is strictly prohibited.

8-3-15.DCS1800、PCS1900发射器（SIM1，T）

**如果检查发射链，
不仅要检查射频设备，同样需要检查电阻器，感应器和电容器。

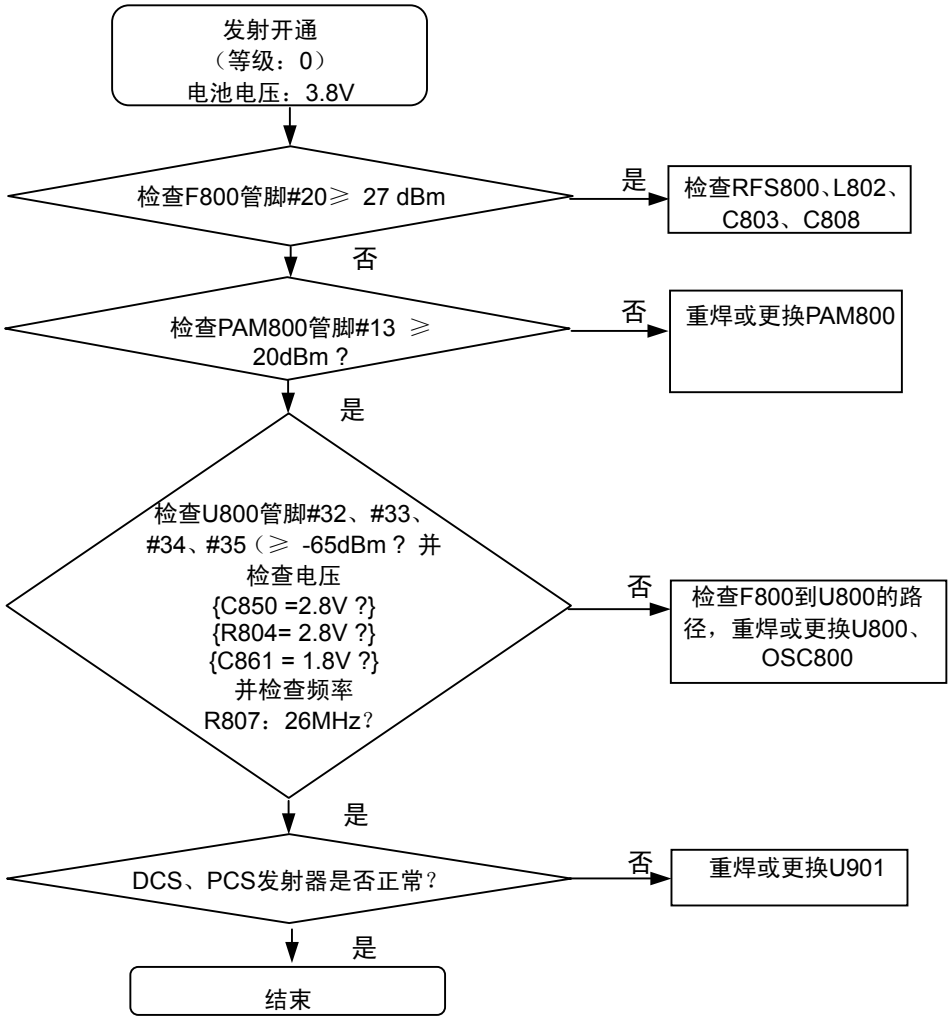

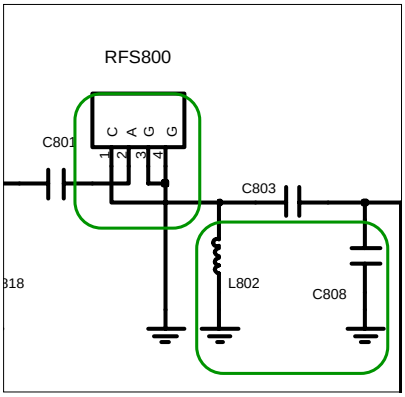

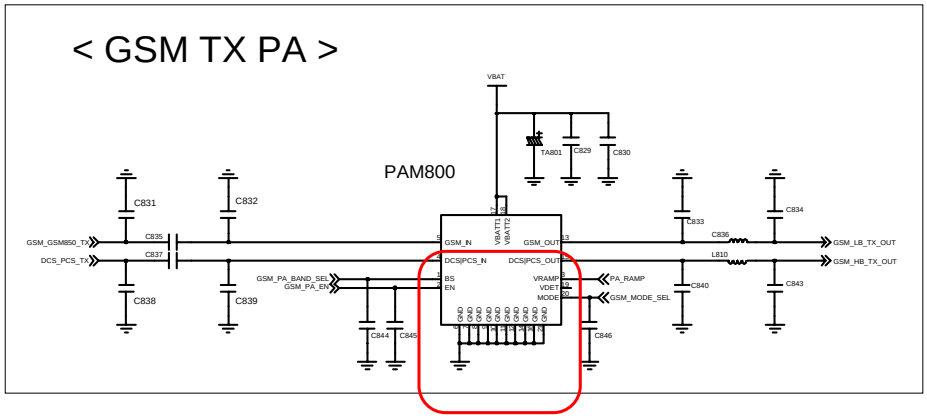

保密和所有权-本维修手册内容的变更恕不另行通知。
未经三星书面授权而发布，传送，或违背本文件中的任何内容或数据是严格禁止的。

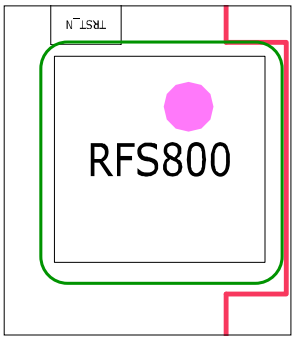

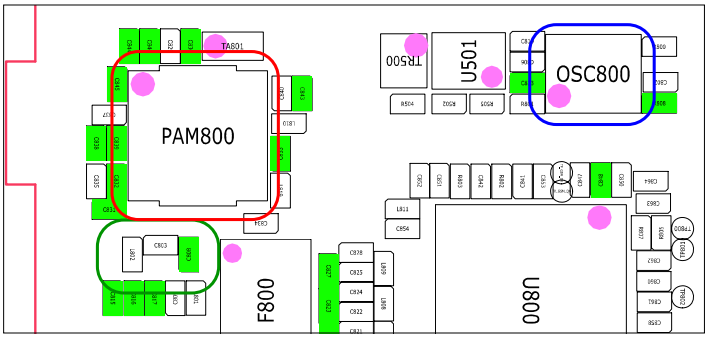

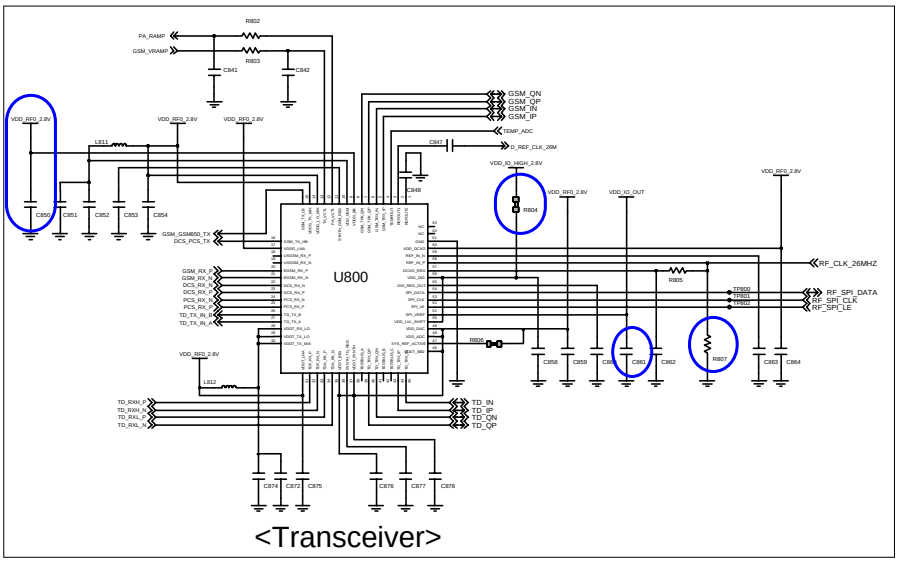

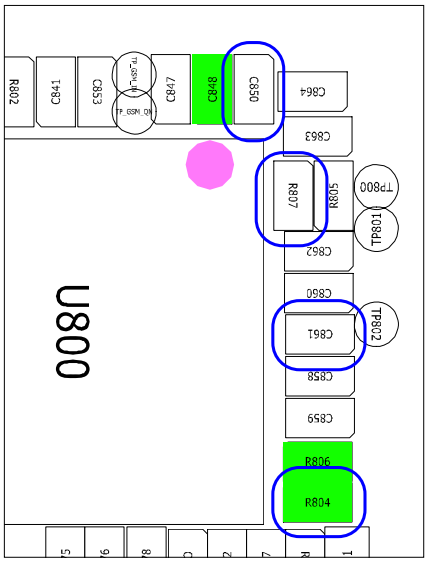

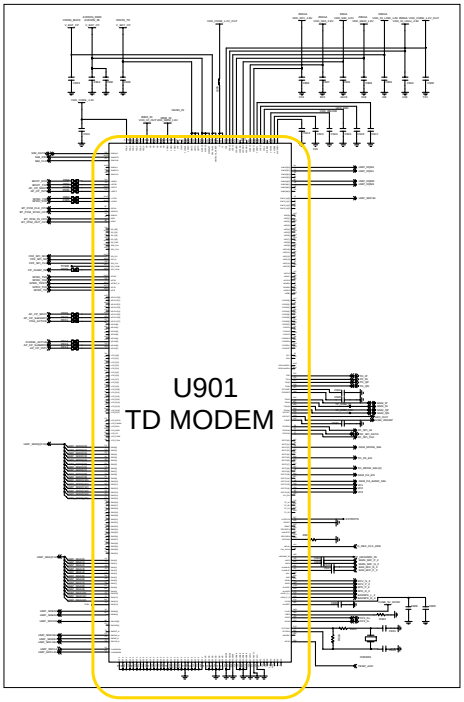

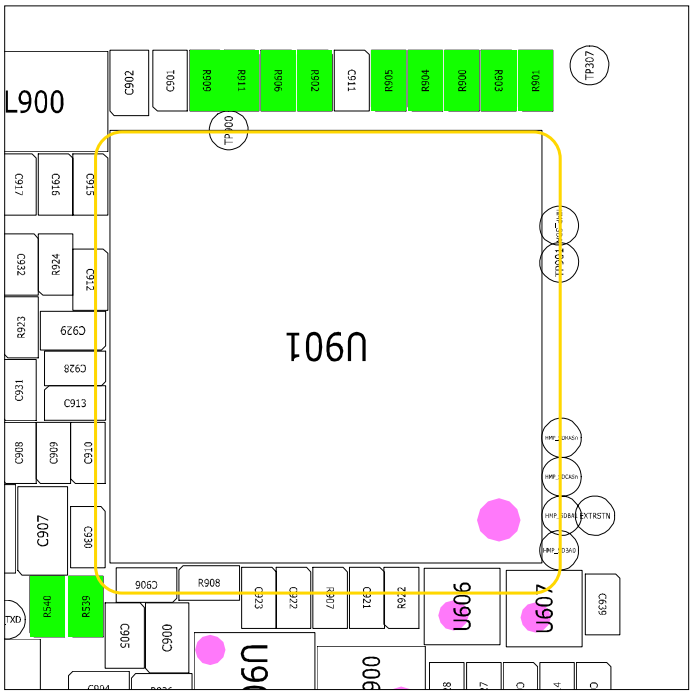

Confidential and proprietary-the contents in this service guide subject to change without prior notice.
Distribution, transmission, or infringement of any content or data from this document without Samsung's written authorization is strictly prohibited.

8-3-16.TD-SCDMA A发射器（SIM1，T）

**如果检查发射链，
不仅要检查射频设备，同样需要检查电阻器，感应器和电容器。

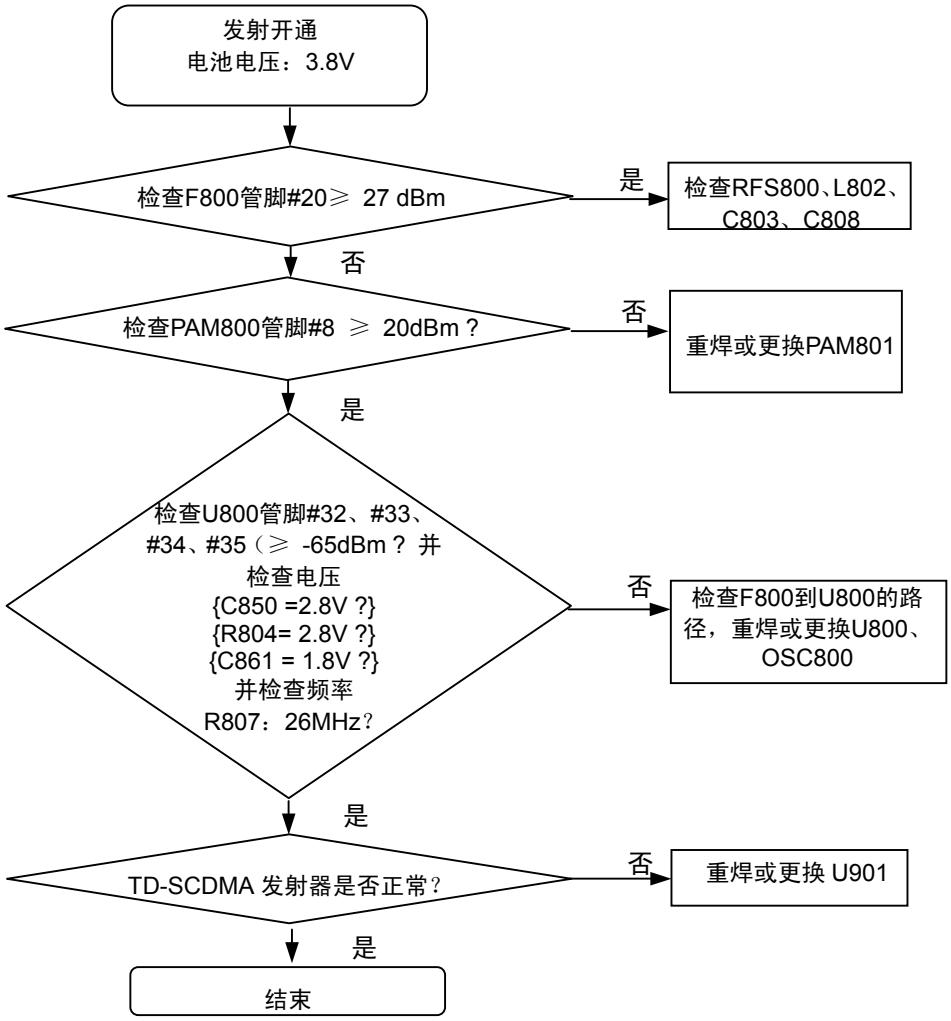

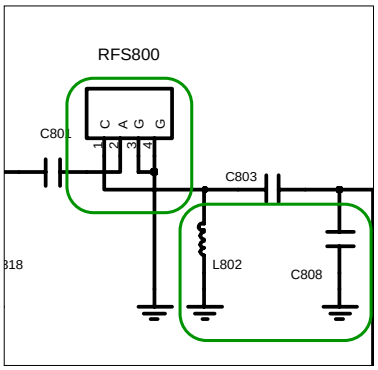

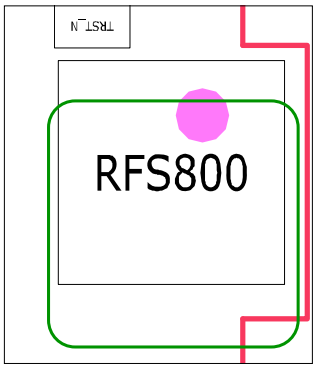

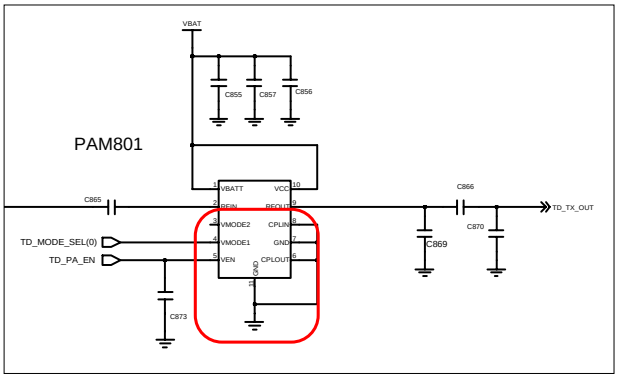

保密和所有权-本维修手册内容的变更恕不另行通知。
未经三星书面授权而发布，传送，或违背本文件中的任何内容或数据是严格禁止的。

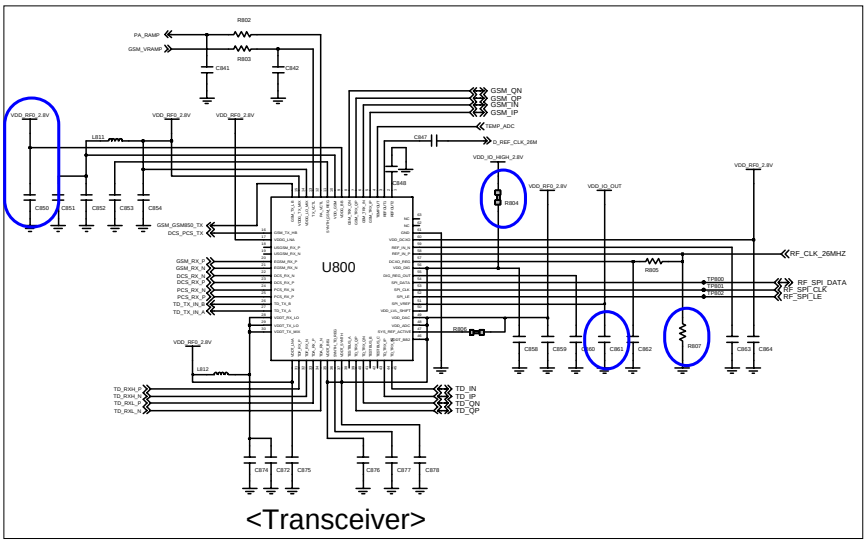

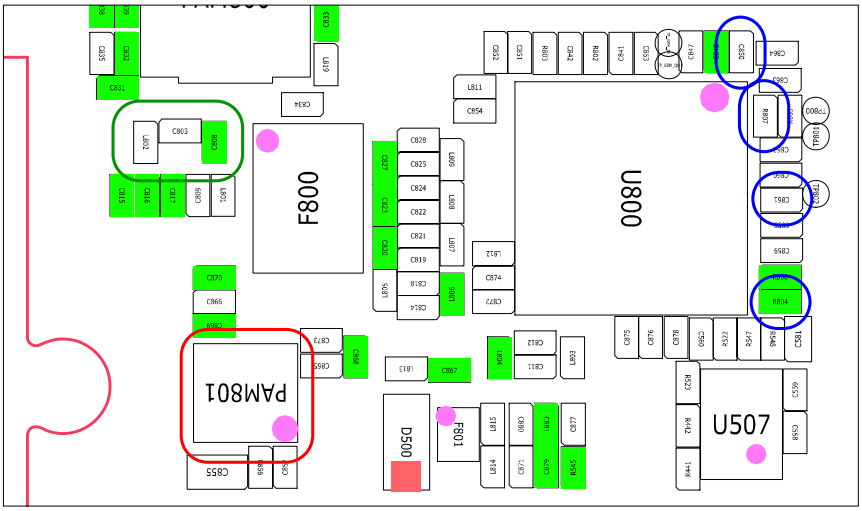

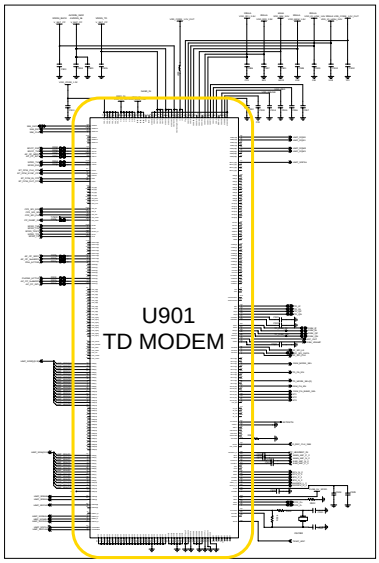

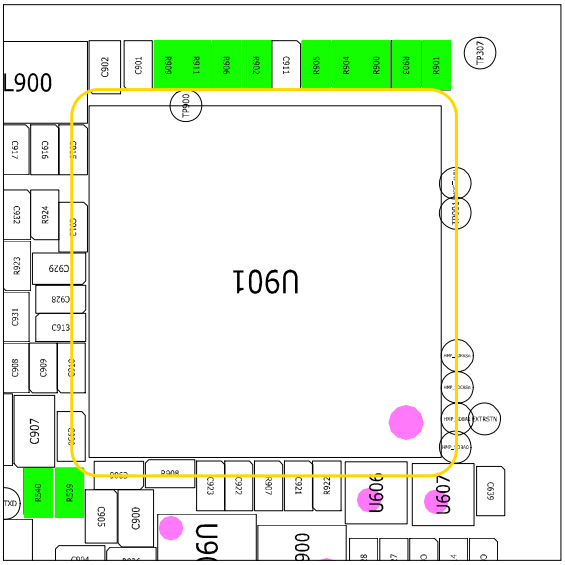

Confidential and proprietary-the contents in this service guide subject to change without prior notice.
Distribution, transmission, or infringement of any content or data from this document without Samsung's written authorization is strictly prohibited.

8-3-17.GSM900发射器（SIM2，G）

**如果检查发射链，
不仅要检查射频设备，同样需要检查电阻器，感应器和电容器。

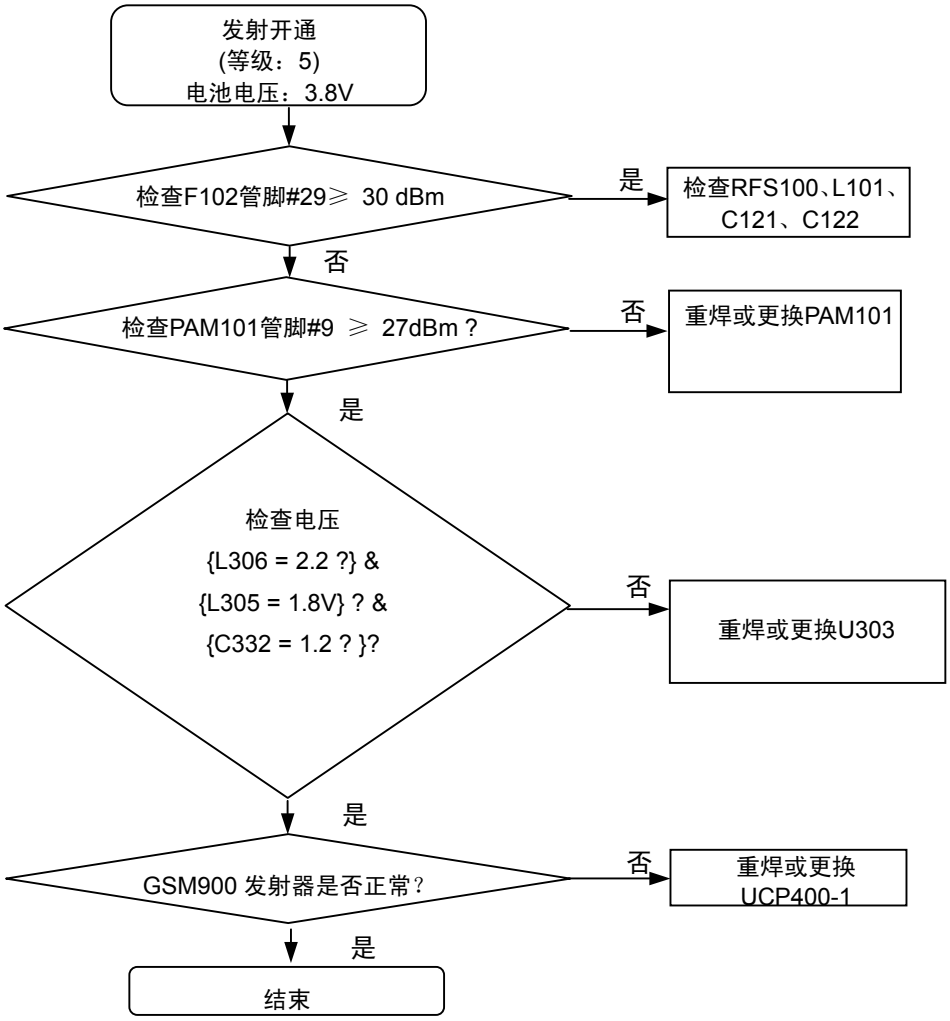

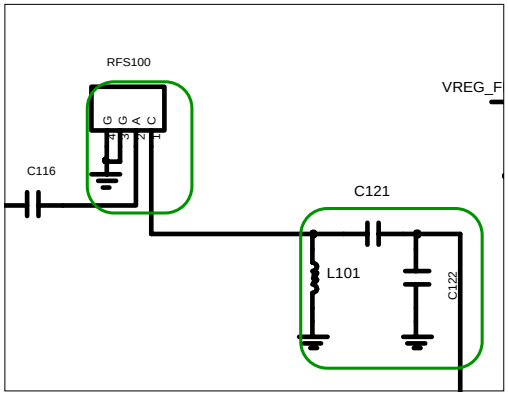

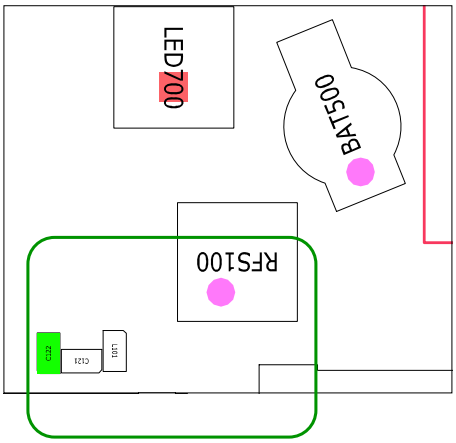

保密和所有权-本维修手册内容的变更恕不另行通知。
未经三星书面授权而发布，传送，或违背本文件中的任何内容或数据是严格禁止的。

< 2G PAM (linear FULL EDGE PA) >

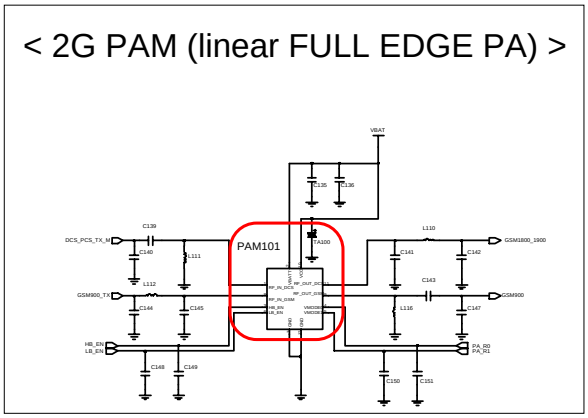

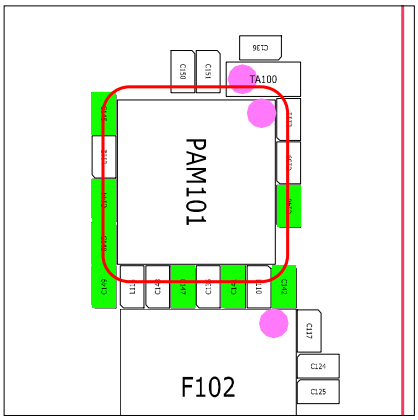

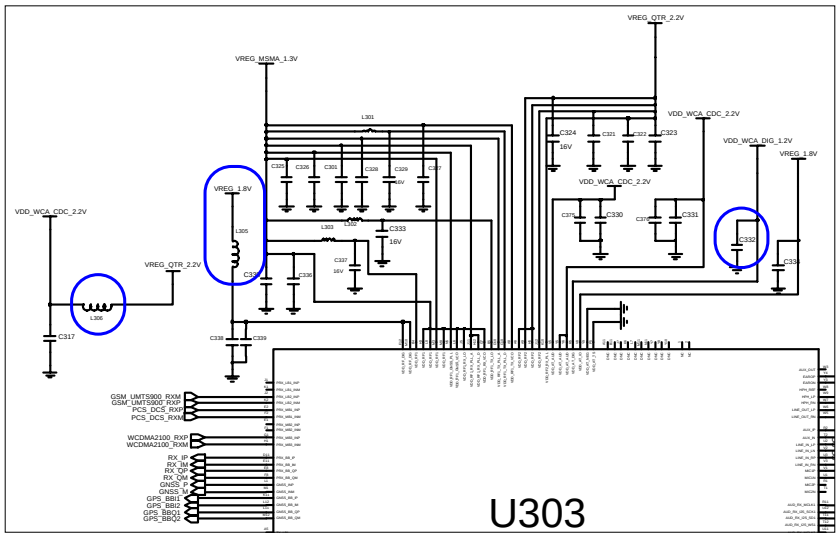

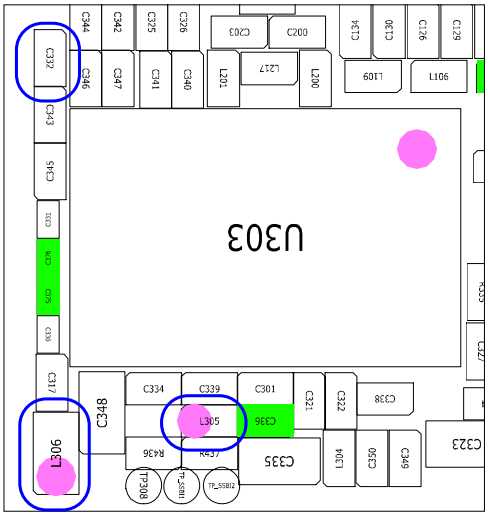

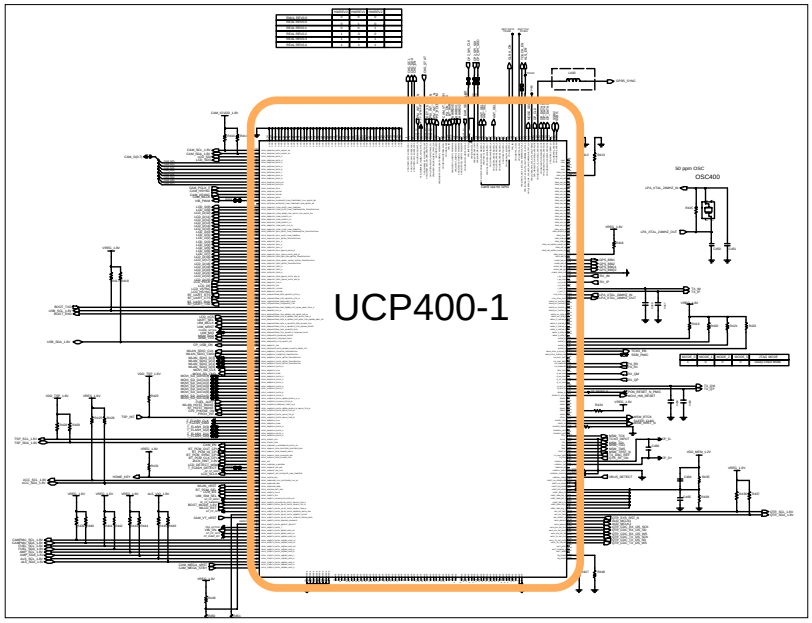

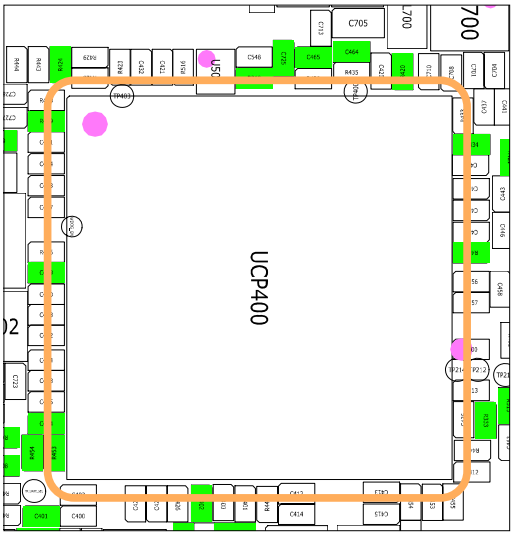

Confidential and proprietary-the contents in this service guide subject to change without prior notice.
Distribution, transmission, or infringement of any content or data from this document without Samsung's written authorization is strictly prohibited.

8-3-18.DCS1800，PCS1900发射器（SIM2，G）

**如果检查发射链，
不仅要检查射频设备，同样需要检查电阻器，感应器和电容器。

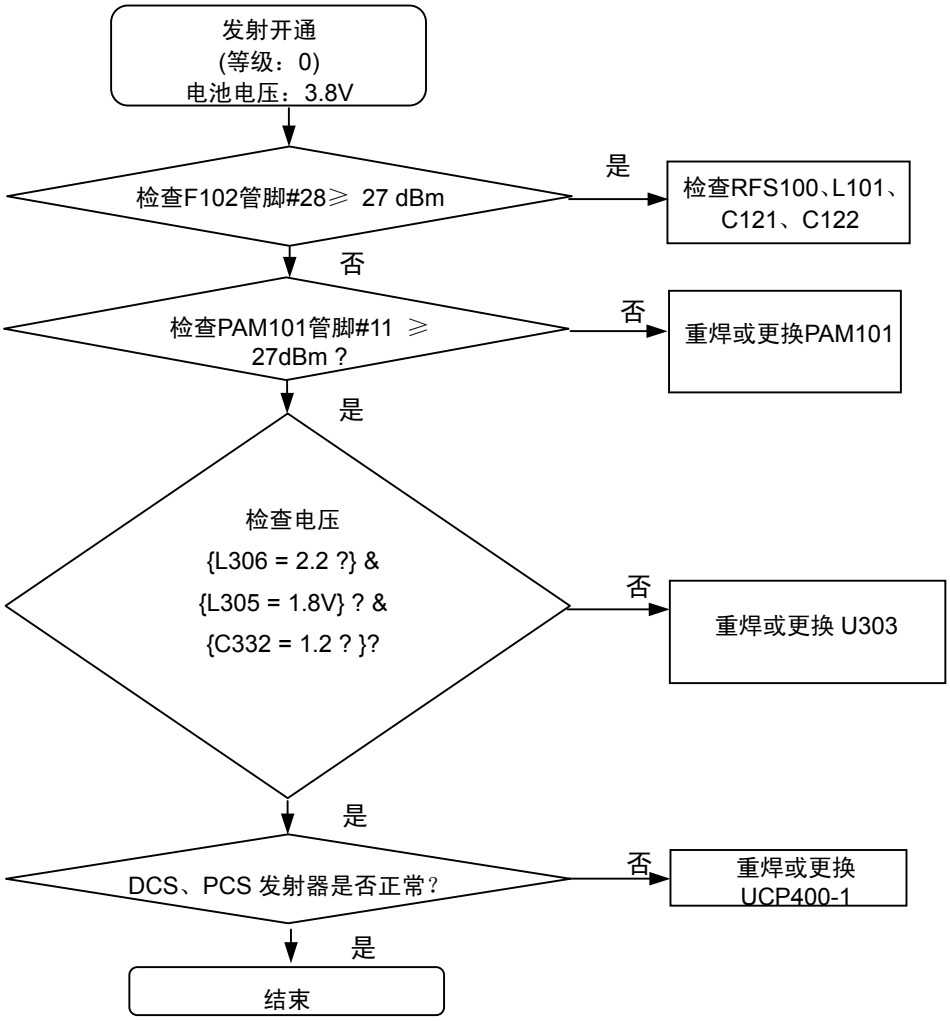

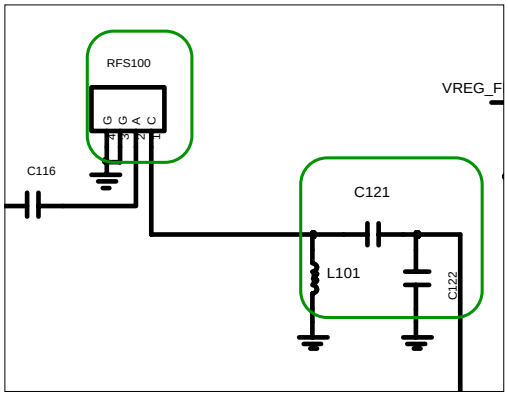

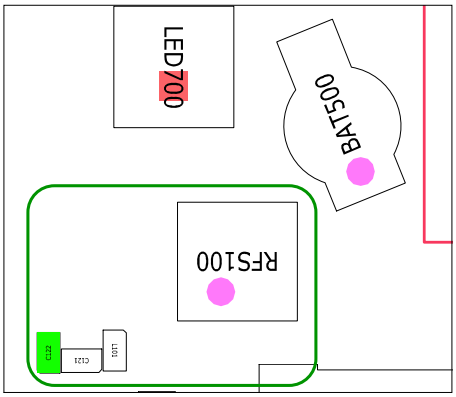

保密和所有权-本维修手册内容的变更恕不另行通知。
未经三星书面授权而发布，传送，或违背本文件中的任何内容或数据是严格禁止的。

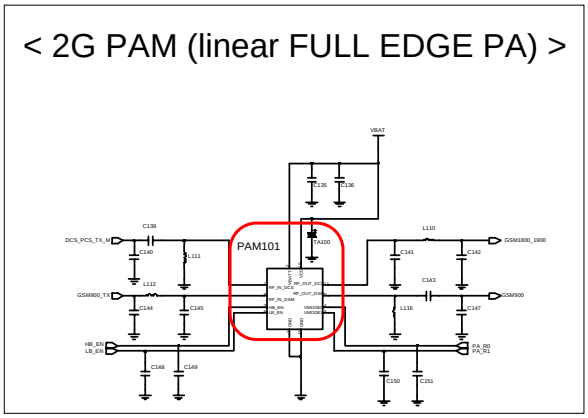

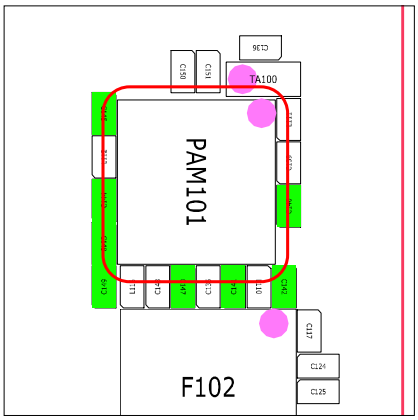

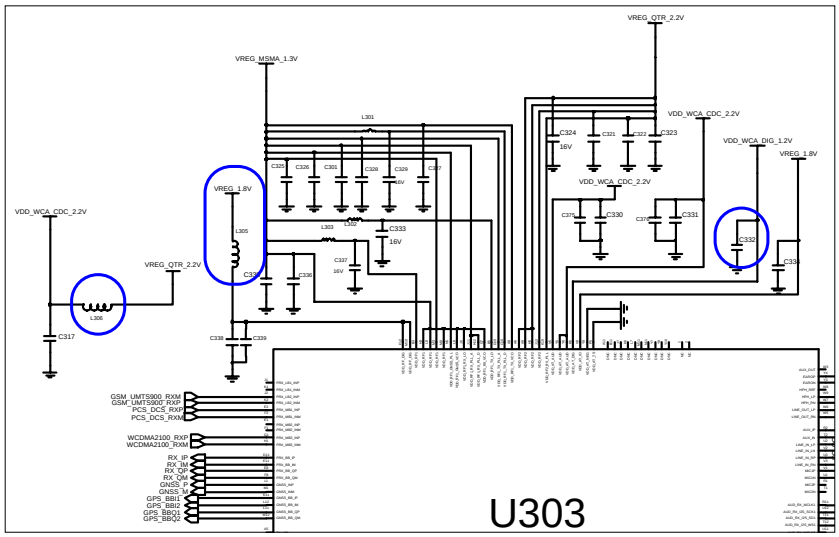

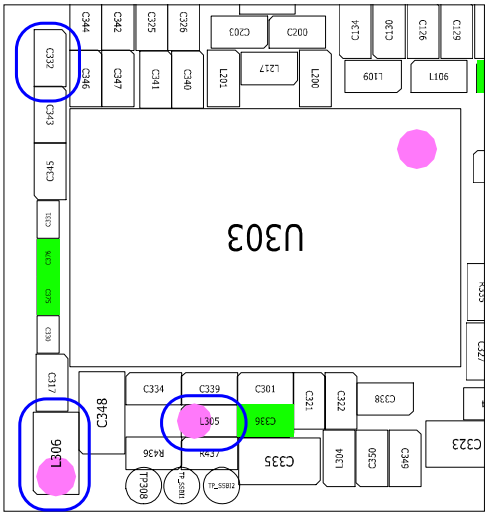

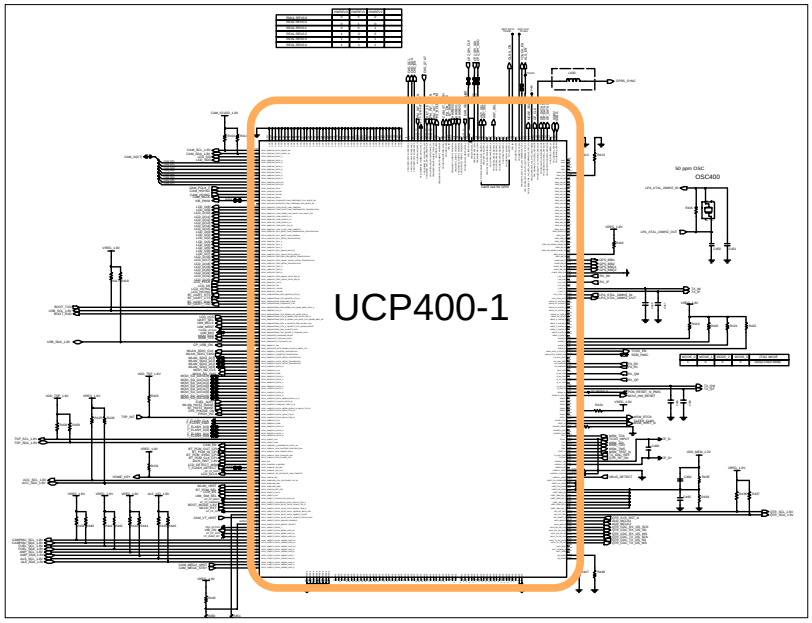

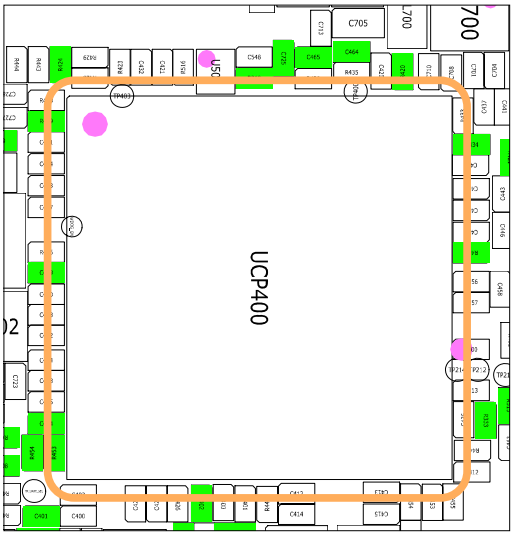

Confidential and proprietary-the contents in this service guide subject to change without prior notice.
Distribution, transmission, or infringement of any content or data from this document without Samsung's written authorization is strictly prohibited.

8-3-19.WCDMA1发射器（SIM2，G）

**如果检查发射链，
不仅要检查射频设备，同样需要检查电阻器，感应器和电容器。

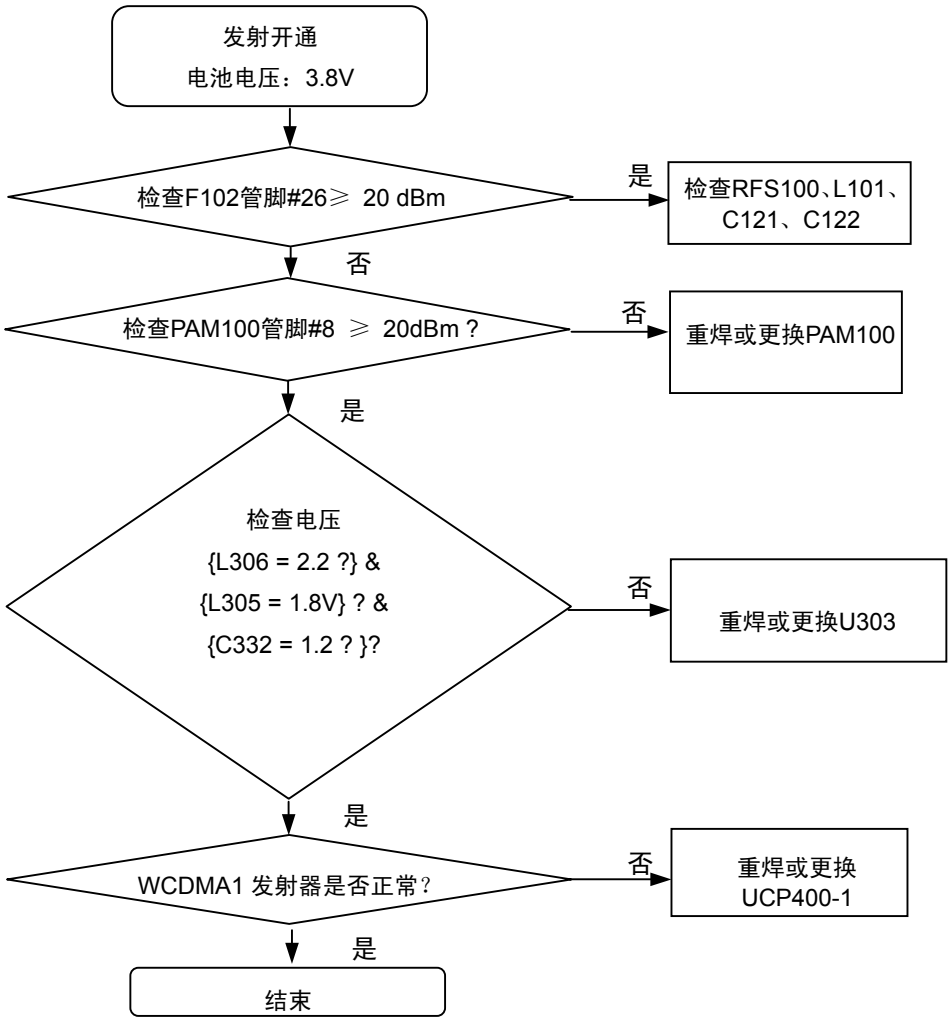

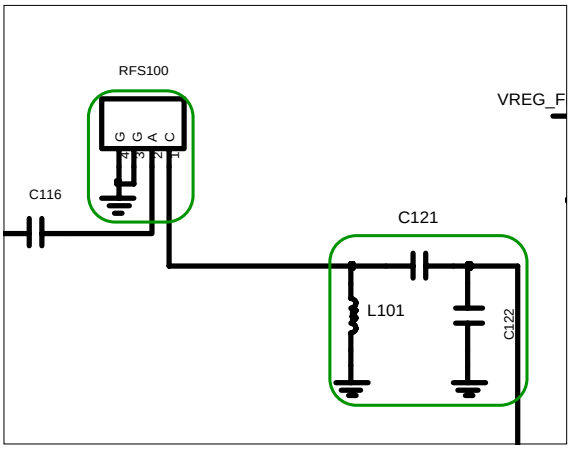

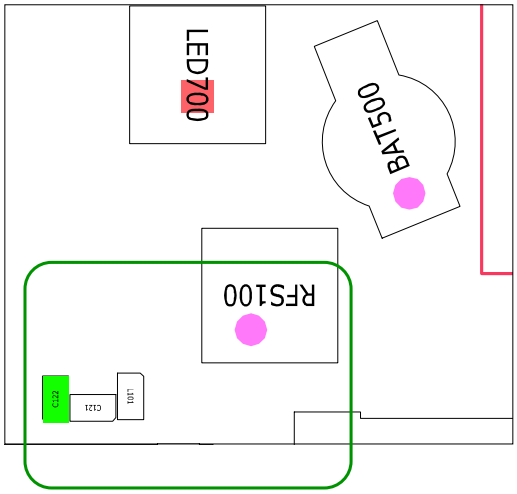

保密和所有权-本维修手册内容的变更恕不另行通知。
未经三星书面授权而发布，传送，或违背本文件中的任何内容或数据是严格禁止的。

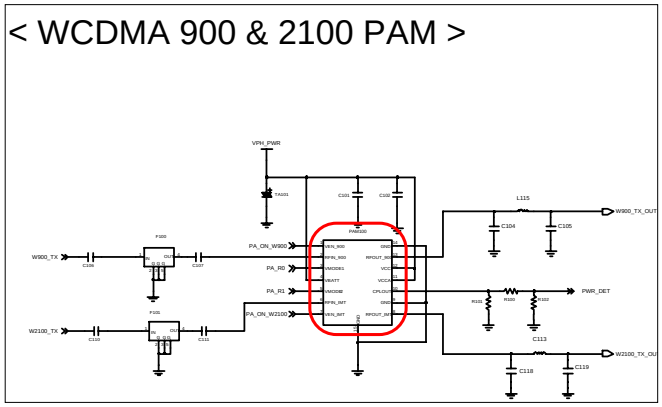

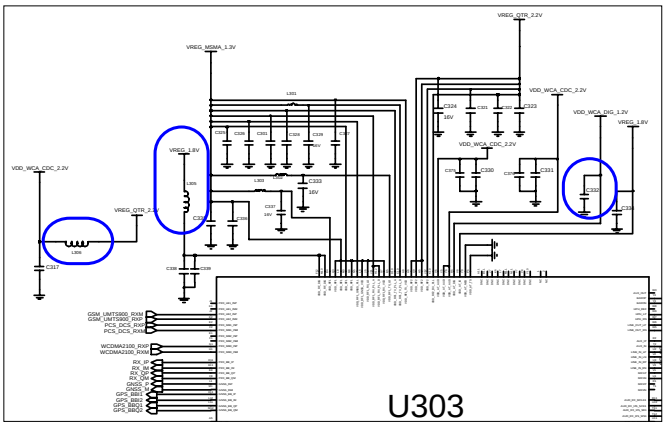

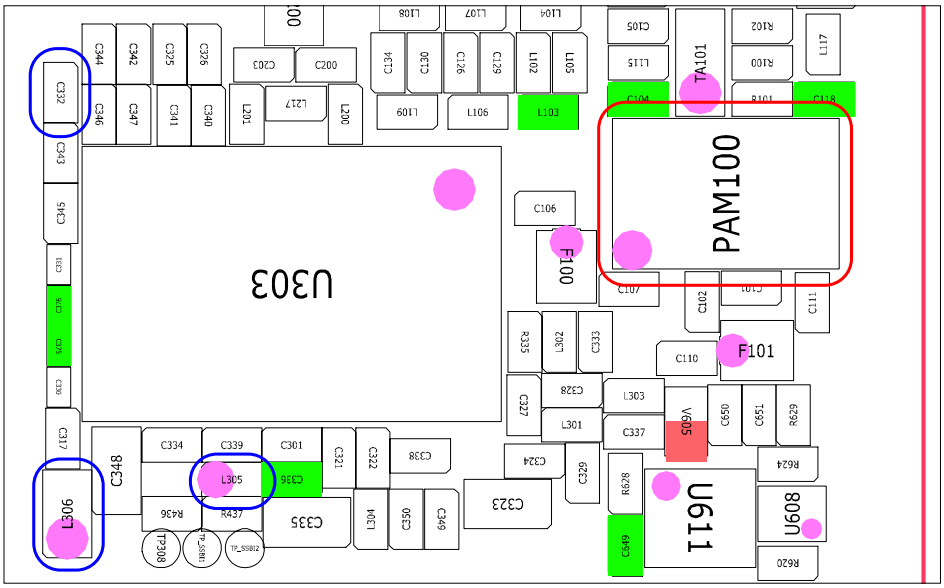

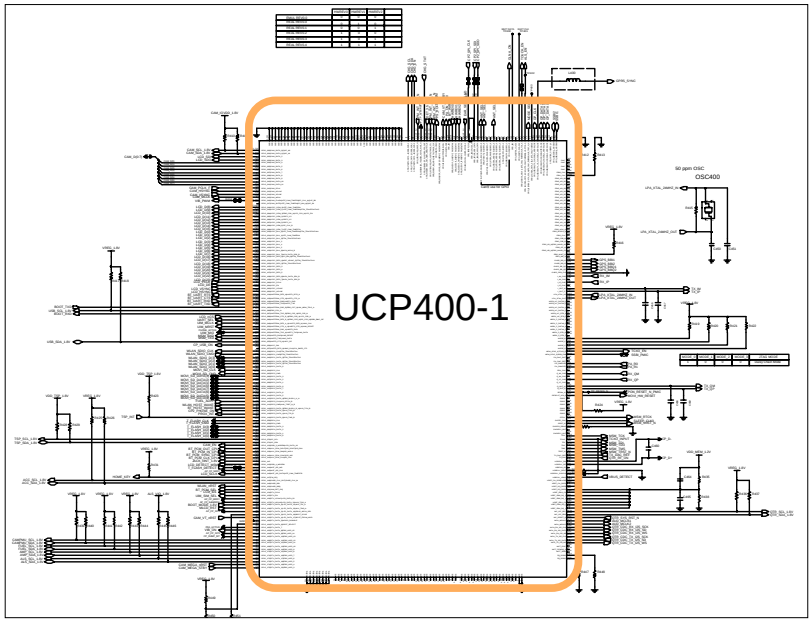

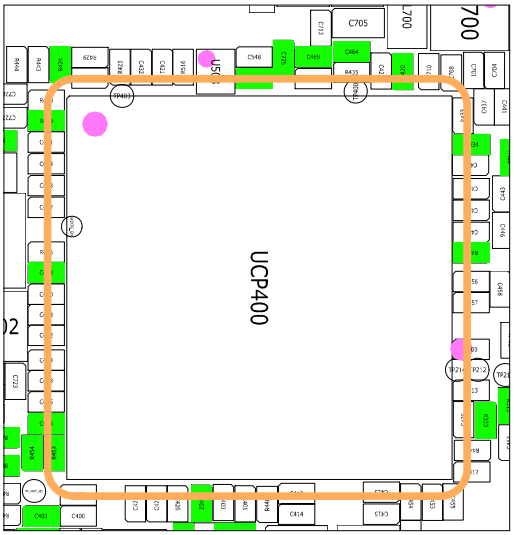

Confidential and proprietary-the contents in this service guide subject to change without prior notice.
Distribution, transmission, or infringement of any content or data from this document without Samsung's written authorization is strictly prohibited.

8-3-20.WCDMA8发射器（SIM2，G）

**如果检查发射链，
不仅要检查射频设备，同样需要检查电阻器，感应器和电容器。

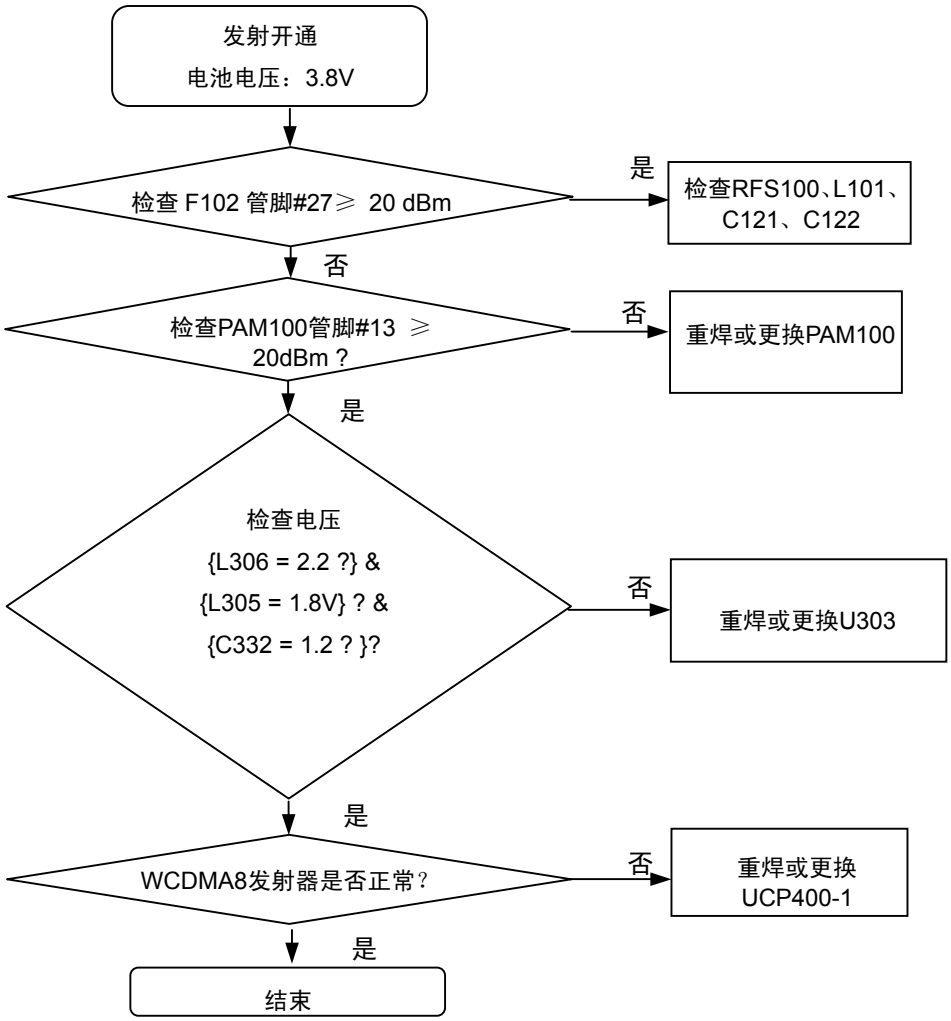

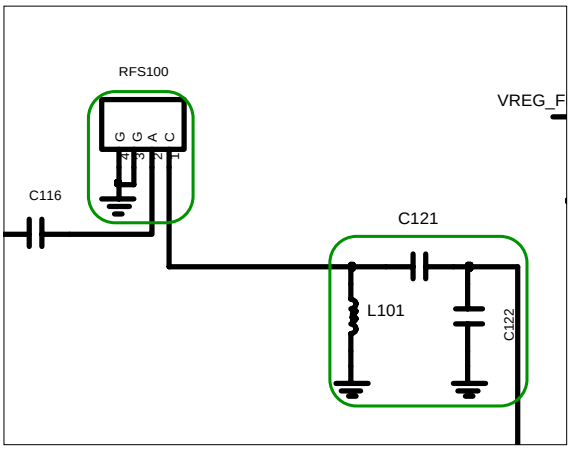

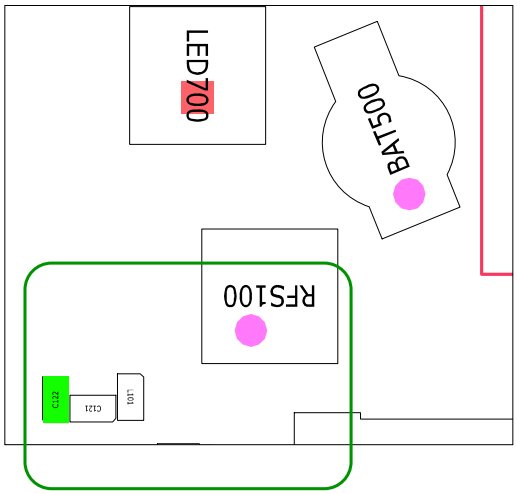

保密和所有权-本维修手册内容的变更恕不另行通知。
未经三星书面授权而发布，传送，或违背本文件中的任何内容或数据是严格禁止的。

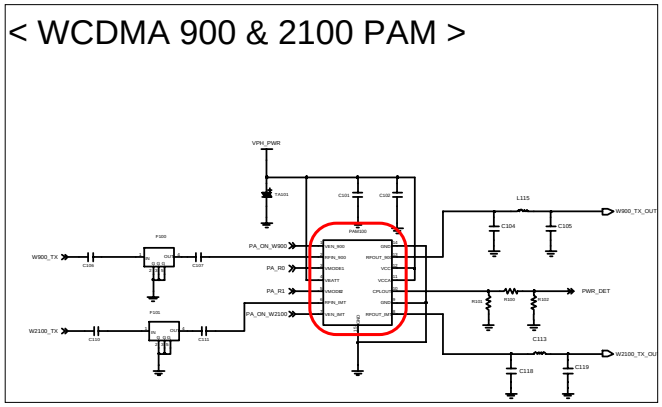

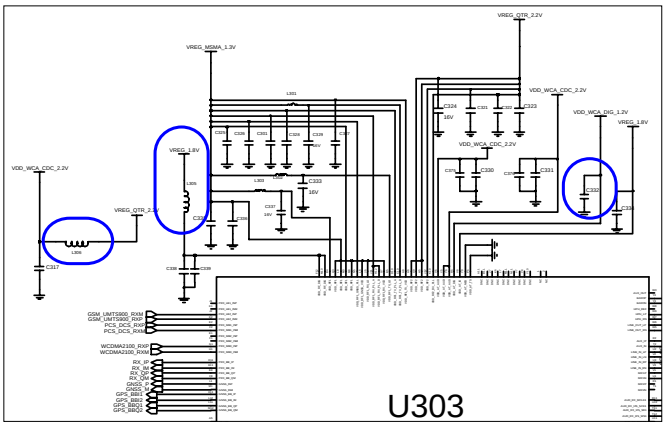

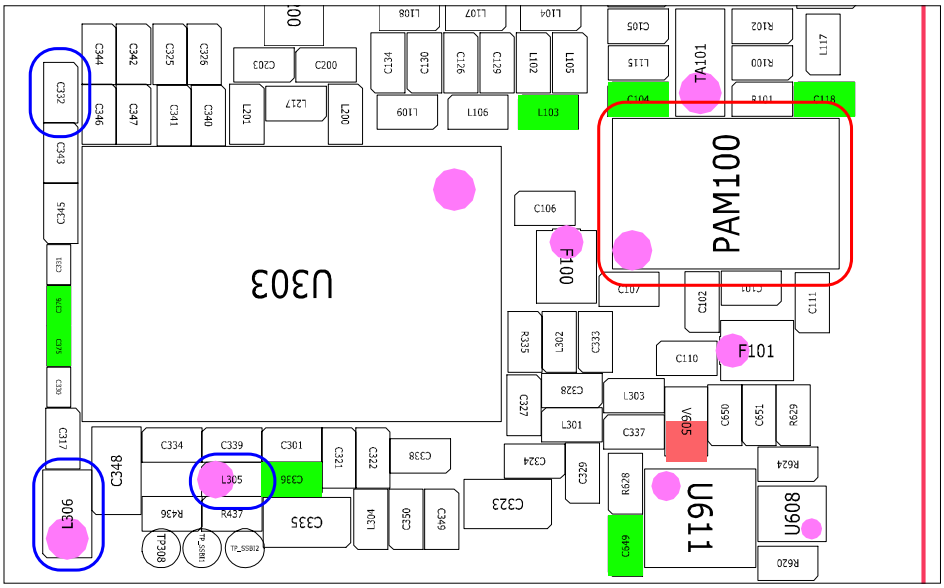

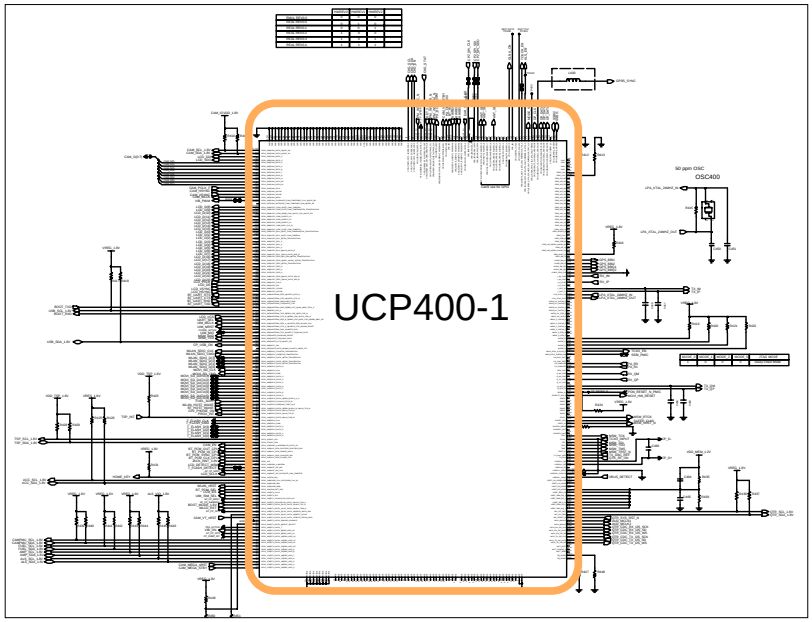

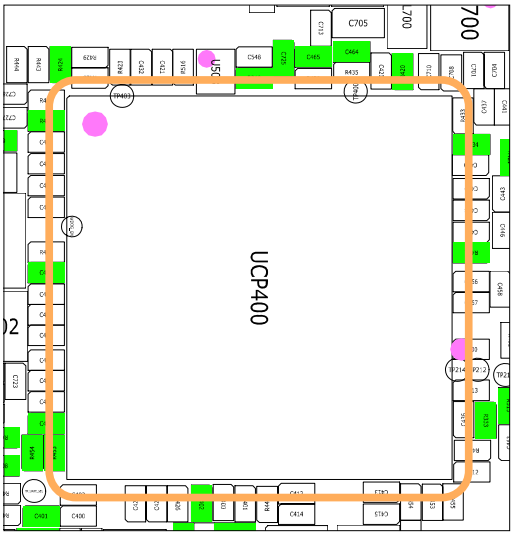

Confidential and proprietary-the contents in this service guide subject to change without prior notice.
Distribution, transmission, or infringement of any content or data from this document without Samsung's written authorization is strictly prohibited.

8-3-21.故障处

UCP200 顶部视图-SC8800GS2-381G

↘	1	2	3	4	5	6	7	8	9	10	11	12	13	14	15	16	17	18	19	20	21	22	23
A	●	●	○	○	○	○	○	○	○	○	○	○	○	●	●	●	●	●	●	●	●	●	●
B	○	○	○	○	●	○	○	○	●	○	●	●	○	○	○	●	●	●	●	●	●	●	●
C	○	○	○	○	●	○	○	○	○	○	●	○	○	○	●	○	○	●	●	●	●	●	●
D	○	●	●																		●	●	○
E	●	●	●		○	○	○	○	○	○	○	○	○	●	●	○	○	○	○		●	○	○
F	●	●	●		○	○	○	○	○	○	●	●	○	○	○	○	●	●	○		●	●	●
G	○	●	●		○	○												○	○		●	●	○
H	○	○	○		●	●												○	○		●	○	○
J	○	○	●		●	●			○	●	●	●	●	○	○			●	○		●	●	○
K	○	●	●		○	○			○			○			○			●	●		●	●	●
L	○	●	○		○	○			○		○	○	○		○			○	●		●	●	●
M	○	○	○		○	○			○	○	○	○	○	○	○			○	●		●	●	●
N	○	●	○		○	○			○		○	○	○		○			●	●		●	●	●
P	○	●	○		●	●			○			○			○			○	●		○	○	○
R	○	○	○		●	●			○	○	○	○	○	○	○			●	○		○	○	○
T	○	○	○		●	●												○	○		○	○	○
U	●	○	○		●	●												○	○		○	○	○
V	●	○	○		●	○	●	○	○	●	○	○	○	○	●	●	○	○	○		○	○	○
W	○	○	○		●	○	●	○	●	●	○	●	○	○	●	●	○	○	●		○	○	○
Y	○	○	○																		○	○	○
AA	○	○	○	●	○	○	●	○	●	○	○	○	○	●	●	○	○	○	○	○	○	○	○
AB	●	○	○	●	○	●	○	○	●	○	○	●	●	●	○	○	○	○	○	○	○	○	○
AC	●	○	●	●	●	○	○	●	○	○	○	○	●	●	○	○	○	○	○	○	○	○	●

UME200 - K522H1HACF-B050

↘	1	2	3	4	5	6	7	8	9	10	11	12	13	14
A	●	●	●	○	○	○	○	○	○	○	○	○	●	●
B	●	○	○	○	○	○	●	●	●	○	●	●	○	●
C	○	●	○	○	○	○	○	○	○	●	●	○	○	○
D	○	○	○	●								●	●	○
E	●	○	○		○	●	●	●	●	●		●	○	○
F	○	○	○		●					●		○	○	○
G	○	○	○		○					●		○	○	○
H	○	○	○		○					○		○	○	○
J	○	○	○		○					○		○	●	○
K	○	○	○		○	○	○	○	○	○		○	○	○
L	●	○	○									○	○	○
M	○	○	●	○	○	○	○	○	●	●	●	●	○	○
N	●	○	●	○	○	○	●	○	●	●	●	●	○	●
P	●	●	○	○	○	○	○	○	○	○	○	○	●	●

保密和所有权-本维修手册内容的变更恕不另行通知。
未经三星书面授权而发布，传送，或违背本文件中的任何内容或数据是严格禁止的。